www.freeservicemanuals.info
3/1/2014

HCD-H71/H71M

SERVICE MANUAL

AEP Model
E Model
Australian Model
Tourist Model
HCD-H71

AEP Model
UK Model
HCD-H71M

Free service manuals
Gratis schema's
Digitized by
www.freeservicemanuals.info

HCD-H71/H71M are the CD player and stereo deck receiver in FH-B710, FH-B900and MHC-710.

Photo : E model

Dolby noise reduction manufactured under license from Dolby Laboratories Licensing Corporation.
" DOLBY" and the double-D symbol ▯▯ are trademarks of Dolby Laboratories Licensing Corporation.

CD SECTION	Model Name Using Similar Mechanism		HCD-H61/H61M
	CD Mechanism Type		CDM13B-5BD4E
	Base Unit Type		BU-5BD4E
TAPE DECK SECTION	Model Name Using Similar Mechanism		DXA-H2750
	Tape Transport Mechanism Type	DECK-A	TCM-190RA12A
		DECK-B	TCM-190RB22A

SPECIFICATIONS

Tuner section

FM stereo, FM/AM superheterodyne tuner

FM tuner section

Tuning range
Except EE, JE model : 87.5 — 108.0 MHz
EE model : 65.0 — 74.0 MHz
87.5 — 108.0 MHz
JE model : 76.0 — 108.0 MHz
Antenna
HCD-H71 : Telescopic antenna
HCD-H71M : FM lead antenna
Antenna terminals 75 ohm unbalanced
Intermediate frequency 10.7 MHz

AM tuner section

Tuning range
AEP, UK, EE model : MW 531 — 1,602 kHz
LW 153 — 279 kHz
G model : AM 531 — 1,602 kHz
IT model : AM 522 — 1,611 kHz
AUS model : MW 531 — 1,602 kHz
SW 5.95 — 17.9MHz
E, EA, JE model : MW 531 — 1,602 kHz (at 9 kHz step)
MW 530 — 1,710kHz (at 10kHz step)
SW 5.95 — 17.9MHz
Antenna AM loop antenna
External antenna terminals
Intermediate frequency 450 kHz

Amplifier section

AEP, UK, EE, G, IT model :
Continuous RMS power output:
40+40 watts (6 ohms at 1 kHz, DIN)
45+45 watts (6 ohms at 1 kHz, 5% THD)
Music power output:
80+80 watts (6 ohms at 1 kHz, 10% THD)
E, EA, AUS, JE model :
Continuous RMS power output:
45+45 watts (6 ohms at 1 kHz, 5% THD)
Peak music power output:
600 watts (4 speakers driven)

— Continued on next page —

MICROFILM

MINI Hi-Fi COMPONENT SYSTEM

SONY®

Global electronic heritage manuals

www.freeservicemanuals.info

Inputs
E, EA, AUS, JE model
MIX MIC (minijack):
Sensitivity 1 mV,
impedance 600 ohms
VIDEO/AUX (phono jack):
sensitivity 250 mV,
impedance 47 kilohms
AEP, UK, EE, G, IT model :
PHONO (phono jack):
sensitivity 5 mV,
impedance 47 kilohms
Outputs
HEADPHONES (stereo minijack):
accept headphones of 8 ohms or more.
SPEAKERS: accept impedance of 6 to 16 ohms.
SURROUND SPEAKERS (only for E, EA, AUS, JE model) :
accept impedance of 8 to 16 ohms.

Compact disc player section

System Compact disc digital audio system
Laser Semiconductor laser
Wavelength 780 – 790 nm

Cassette deck section

Recording system
4-track 2-channel stereo
Frequency response
(DOLBY NR OFF)
60 – 13,000 Hz (±3 dB),
using TYPE I
cassette (Sony HF-S)
60 – 14,000 Hz (±3 dB),
using TYPE II
cassette (Sony UX-S)
Wow and flutter
0.1% WRMS ±0.3% (DIN)

General

Destination	Power requirements	Power consumption
AEP, EE, G, IT model	220 – 230 V AC, 50/60 Hz	140 W
UK model	240 V AC, 50Hz	250 W
AUS model		170 W
E, EA, JE model	110 – 120/ 220 – 240 V AC, adjustable, 50/60Hz	170 W

Dimensions
Approx. 225 x 285 x 265 mm (w/h/d)
(8 7/8 x 11 1/4 x 10 1/2 inches)
incl. projecting parts and controls
Mass Approx. 6.6 kg (14 lb 8 oz)

TABLE OF CONTENTS

Section	Title	Page
1.	SERVICING NOTE	3
2.	GENERAL	
	Parts Identification	4
	Clock Setting	5
3.	DAIAGRAMS	
3-1.	Semiconductor Lead Layouts	6
3-2.	Circuit Boards Location	8
3-3.	IC Block Diagram (MAIN SECTION)	9
3-4.	Printed Wiring Boards (MAIN SECTION) – AEP, UK, EE, G, IT MODEL –	12
3-5.	Schematic Diagram (MAIN SECTION) – AEP, UK, EE, G, IT MODEL –	15
3-6.	Printed Wiring Boards (MAIN SECTION) – MAIN BOARD:E,EA,AUS,JE MODEL –	19
3-7.	Schematic Diagram (MAIN SECTION) – MAIN BOARD:E,EA,AUS,JE MODEL –	23
3-8.	Printed Wiring Boards (DECK SECTION)	27
3-9.	Schematic Diagram (DECK SECTION)	31
3-10.	Printed Wiring Boards (DISPLAY SECTION)	36
3-11.	Schematic Diagram (DISPLAY SECTION)	39
3-12.	IC Block Diagram (DISPLAY SECTION)	42
3-13.	IC Block Diagram (CD SECTION)	43
3-14.	Printed Wiring Boards (CD SECTION)	39
3-15.	Schematic Diagram (CD SECTION)	47
4.	EXPLODED VIEWS	
4-1.	Case, Power Section	51
4-2.	Front Panel Section	52
4-3.	Mechanism Deck Chassis Section	53
4-4.	Tape Mechanism Deck Section-1	54
4-5.	Tape Mechanism Deck Section-2	55
4-6.	CD Mechanism Section-1	56
4-7.	CD Mechanism Section-2	57
5.	ELECTRICAL PARTS LIST	58

NOTE

EE	: East European	EA	: Saudi Arabia
G	: German	AUS	: Australian
IT	: Italian	JE	: Tourist

SAFETY-RELATED COMPONENT WARNING!!

COMPONENTS IDENTIFIED BY MARK ⚠ OR DOTTED LINE WITH MARK ⚠ ON THE SCHEMATIC DIAGRAMS AND IN THE PARTS LIST ARE CRITICAL TO SAFE OPERATION. REPLACE THESE COMPONENTS WITH SONY PARTS WHOSE PART NUMBERS APPEAR AS SHOWN IN THIS MANUAL OR IN SUPPLEMENTS PUBLISHED BY SONY.

Global electronic heritage manuals

www.freeservicemanuals.info 3/1/2014

SECTION 1
SERVICING NOTE

Free service manuals
Gratis schema's
Digitized by
www.freeservicemanuals.info

MODEL IDENTIFICATION
– SPECIFICATION LABEL –

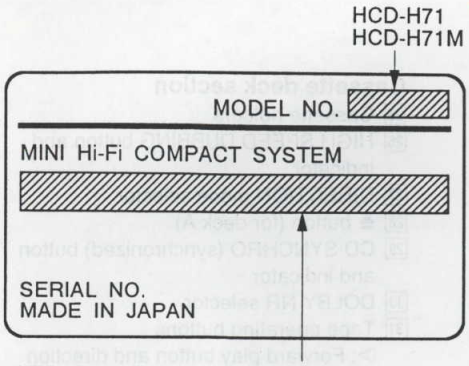

AEP, East European, German,
Italian model : AC 220 – 230 V ~, 50/60 Hz, 140 W
UK model : AC 240 V , 50 Hz, 250 W
E, Saudi Arabia,
Tourist model : AC 110 – 120, 220 – 240 V, 50/60 Hz
170 W
Australian model : AC 240 V, 50 Hz, 170W

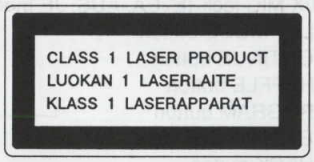

This appliance is classiified as a CLASS 1 LASER PRODUCT MARKING is located on the rear exterior.

The following caution label is located inside of the unit.

CAUTION	:	INVISIBLE LASER RADIATION WHEN OPEN AVOID EXPOSURE TO BEAM.
ADVARSEL	:	USYNLIG LASERSTRÅLING VED ÅBNING NÅR SIKKERHEDSAFBRYDERE ER UDE AF FUNKTION. UNDGÅ UDS ÆTTELSE FOR STRÅLING.
VOROI	:	AVATTAESSA JA SUOJALUKITUS OHITETTAESSA OLET ALTTIINA LASERSÄTEILYLLE.
VARNING	:	LASERSTRÅLING NÄR DENNA DEL ÄR OPPNÄD OCH SPÄRREN AR URXOPPLAD.
ADVARSEL	:	USYNLIG LASERSTRÅLING NÅR DEKSEL ÅPNES UNNGÅ EKSPONERING FOR STRÅLEN.

NOTES ON HANDLING THE OPTICAL PICK-UP BLOCK OR BASE UNIT

The laser diode in the optical pick-up block may suffer electrostatic breakdown because of the potential difference generated by the charged electrostatic load, etc. on clothing and the human body.

During repair, pay attention to electrostatic breakdown and also use the procedure in the printed matter which is included in the repair parts.

The flexible board is easily damaged and should be handled with care.

NOTES ON LASER DIODE EMISSION CHECK

The laser beam on this model is concentrated so as to be focused on the disc reflective surface by the objective lens in the optical pick-up block. Therefore, when checking the laser diode emission, observe more than 30 cm away from the objective lens.

LASER DIODE AND FOCUS SEARCH OPERATION CHECK

1. Make POWER switch on with no disc inserted and disc table closed.
2. Confirm that the following operation is performed while observing the objective lens.

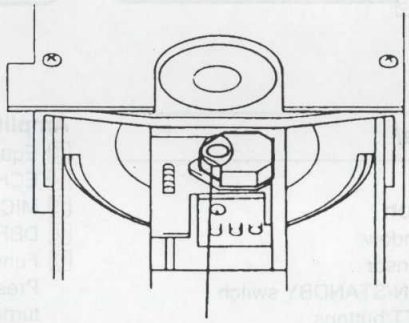

❶ Confirm that laser beam is spread.
❷ Up and downmotion of the objective lens. (3 times)

Global electronic heritage manuals

www.freeservicemanuals.info

SECTION 2
GENERAL

This section is extracted from instruction manual.

Parts Identification

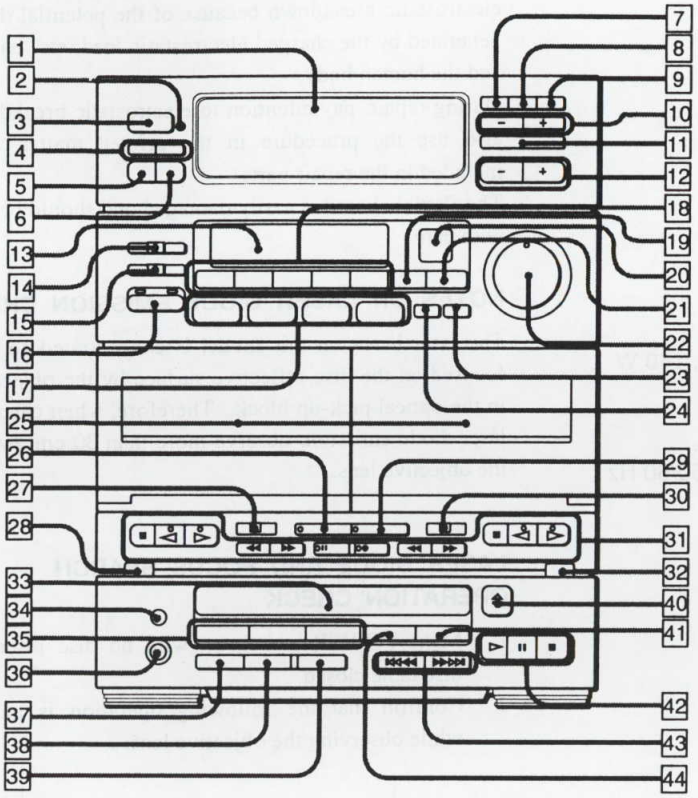

Front Panel

Tuner Section

1 Display window
2 Remote sensor
3 POWER ON/STANDBY switch
4 CLOCK SET buttons
TIMER SET button
CLOCK DISPLAY button
5 TIMER CONT (control) button
6 SLEEP button
7 MEMORY/NEXT button
8 AUTO button
9 MODE button
10 TUNING –/+ buttons
11 BAND button (13)
12 PRESET/TIMER –/+ buttons

Amplifier section

13 Equalizer display window
14 ECHO control (E, EA, AUS, JE model)
15 MIC LEVEL control (E, EA, AUS, JE model)
16 DBFB button and indicators
17 Function selecting buttons and indicators
Pressing these buttons with the power turned off automatically turns on the power, and select the function.
18 (AEP, UK, EE, G, IT model)
ROCK button
POPS button
JAZZ button
HALL button
BGM button
(E, EA, AUS, JE model)
MULTIPLEX buttons
STEREO button
MAIN button and indicator
SUB button and indicator
KARAOKE PON button and indicator
PRESET (preset equalizer setting) button
19 FILE button
20 CURSOR CONTROL lever
21 MEMORY button
22 VOLUME control
23 S-SUR (simulated surround) button and indicator
24 DIRECT button and indicator

Cassette deck section

25 Cassette holders
26 HIGH SPEED DUBBING button and indicator
27 DIRECTION mode selector
28 ⏏ button (for deck A)
29 CD SYNCHRO (synchronized) button and indicator
30 DOLBY NR selector
31 Tape operating buttons
▷: Forward play button and direction indicator, ◁: Reverse play button and direction indicator, ▶▶: Fast rightward and AMS* button, ◀◀: Fast leftward and AMS* button, ■: Stop button, ●REC: Record button and indicator (for deck B only), ❚❚ PAUSE: Pause button and indicator (for deck B only)
32 ⏏ button (for deck B)

CD player section

33 Disc tray
34 MIX MIC jack (E, EA, AUS, JE model)
35 PLAY MODE button
CONTINUE button
SHUFFLE button
PROGRAM button
36 HEADPHONES jack
37 CHECK button
38 CLEAR button
39 EDIT button
40 ⏏ OPEN/CLOSE button
41 TIME button
42 CD player operating buttons
▷: Play button, ❚❚: Pause button, ■: Stop button
43 ⏮◀◀/▶▶⏭ (manual search/AMS*) buttons
44 REPEAT button

** AMS is the abbreviation of Automatic Music Sensor.*

Note:
EE : East European
G : German
IT : Italian
EA : Saudi Arabia
AUS : Australian
JE : Tourist

Global electronic heritage manuals

www.freeservicemanuals.info

Clock Setting

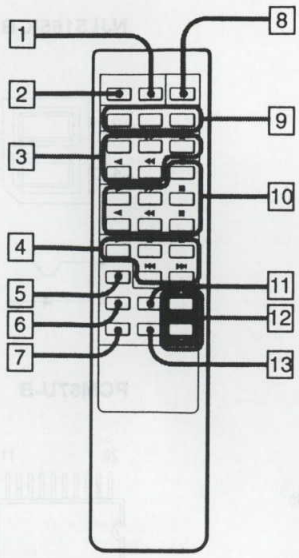

Remote commander

1 SLEEP button
2 FUNCTION button
3 Deck A operating buttons
▶: Forward play button
◀: Reverse play button
▶▶: Fast rightward button
◀◀: Fast leftward button
■: Stop button
4 CD operating buttons
▶: Play button
I◀◀/▶▶I: AMS* buttons
II: pause button
■: Stop button
5 DISPLAY button
6 PRESET button
7 FILE button
8 SYSTEM POWER button
9 Tuner operating buttons
BAND button
PRESET – buton
PRESET + button
10 Deck B operating buttons
▶: Forward play button
◀: Reverse play button
▶▶: Fast rightward button
◀◀: Fast leftward button
II: pause button
■: Stop button
●REC: Record button
11 S-SUR button
12 VOL (volume) +/– buttons
13 DIRECT button

** AMS is the abbreviation of Automatic Music Sensor.*

Setting the Clock

The built-in clock shows the time in the display. Set the clock correctly to enjoy timer-activated features.
The time is shown in 12-hour cycle.
AM 12:00 = midnight
PM 12:00 = noon

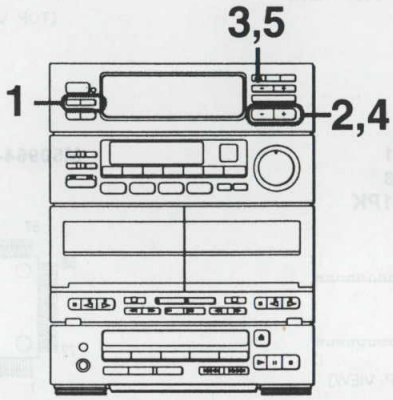

Example: Set to 9:25 in the morning.

1 Press TIMER SET and CLOCK DISPLAY at the same time.
The hour indication starts flashing.

2 Set the hour with PRESET/TIMER – or +.

3 Press MEMORY/NEXT.
The minute indication starts flashing.

4 Set the minute with PRESET/TIMER – or +.

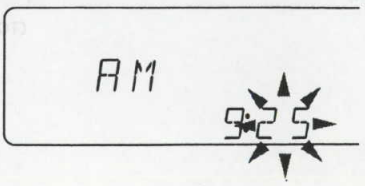

5 Press MEMORY/NEXT.
The clock starts running.

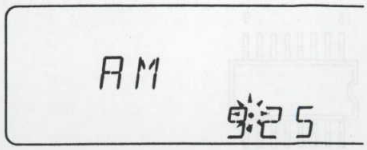

To change to the clock display from other displays

Press CLOCK DISPLAY.
The clock is displayed for about 4 seconds, then the clock display changes into normal display.

When a power interruption occurs
The clock and timer settings are all erased, and "AM 12:00" will flash in the display.

Free service manuals
Gratis schema's
Digitized by
www.freeservicemanuals.info

Global electronic heritage manuals

www.freeservicemanuals.info

SECTION 3
DIAGRAMS

3-1. SEMICONDUCTOR LEAD LAYOUTS

CD4052BCM

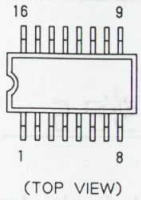

HA12171NT

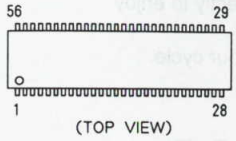

M50253PK
MC14052BCP
XR1091DCP

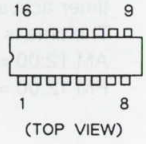

NJL5165K-B

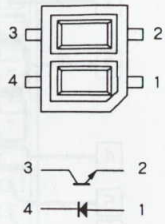

CXA1372AQ

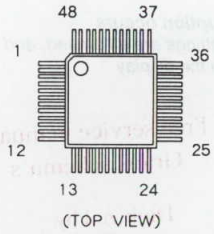

LA1831
LC7218
M65831PK

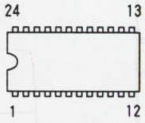

M50964-260FPK

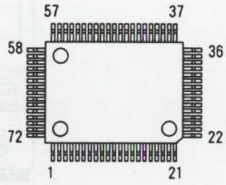

PCM67U-B

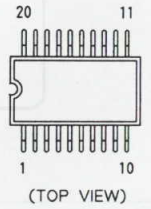

CXA1492BQ

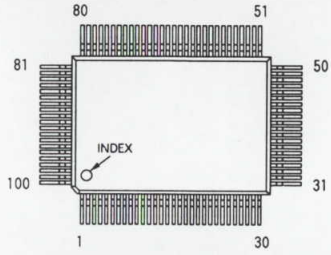

LA5601

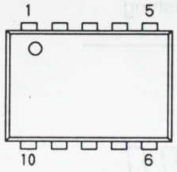

M5230L-A
μPC1237HA

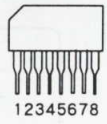

PST572E

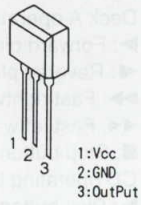

CXD2500BQ
μPD78042GF-020-3B9

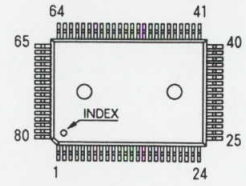

LA6525M

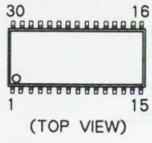

M54641FP

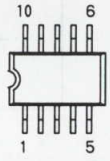

RC4558PS
μPC4570G2

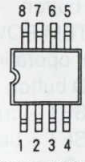

GP1U90XB

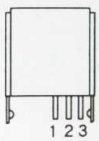

LB1639
M5218AP
X24C01P

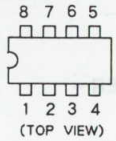

MSM6538-01GS-VKR1

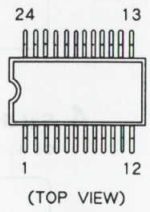

SN755723FT

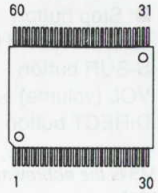

Global electronic heritage manuals

www.freeservicemanuals.info

STK4152MK2K

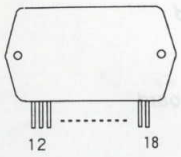

TA7272P

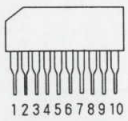

μPD75116GF-F21-3BE

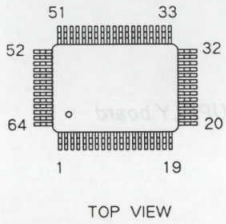

DTA124ES
DTA144ES
DTC114ES
DTC144ES
2SC2603-EF
2SC2724-CD

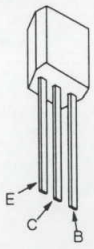

UN4111
2SA1175-HFE
2SC3623A-LK

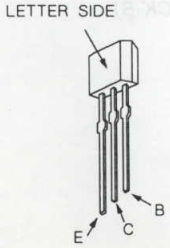

2SA1602-F
2SC3395
2SC4154-F

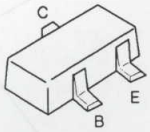

2SB1013-4
2SC1841-PAFAEA
2SC3112-A

2SB1094-LK
2SB1375-LC
2SD2012-LC
2SD2012

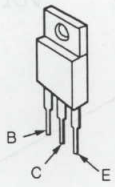

2SD1622-S

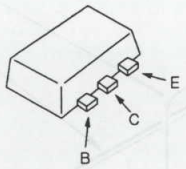

2SK246-GR3

HZS24-1L
HZS6C3L

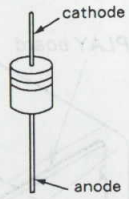

KV1560N

MA152WA

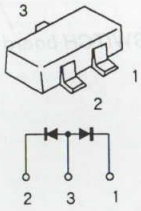

MA3056-L
MA3062-L

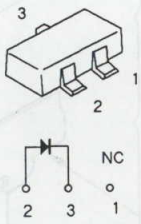

MA8039

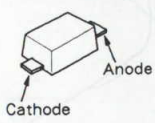

RBA-402

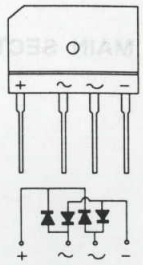

UZL-12L3
1N4148M
10E2

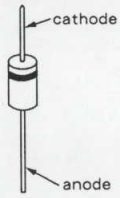

1SS352

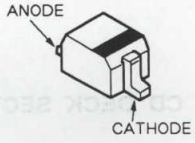

SEL2210S-CD
SEL2210S-D
SEL5220S
SEL5420S
SEL5920A

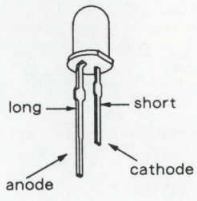

Global electronic heritage manuals

www.freeservicemanuals.info

3-2. CIRCUIT BOARDS LOCATION

- **MAIN SECTION**

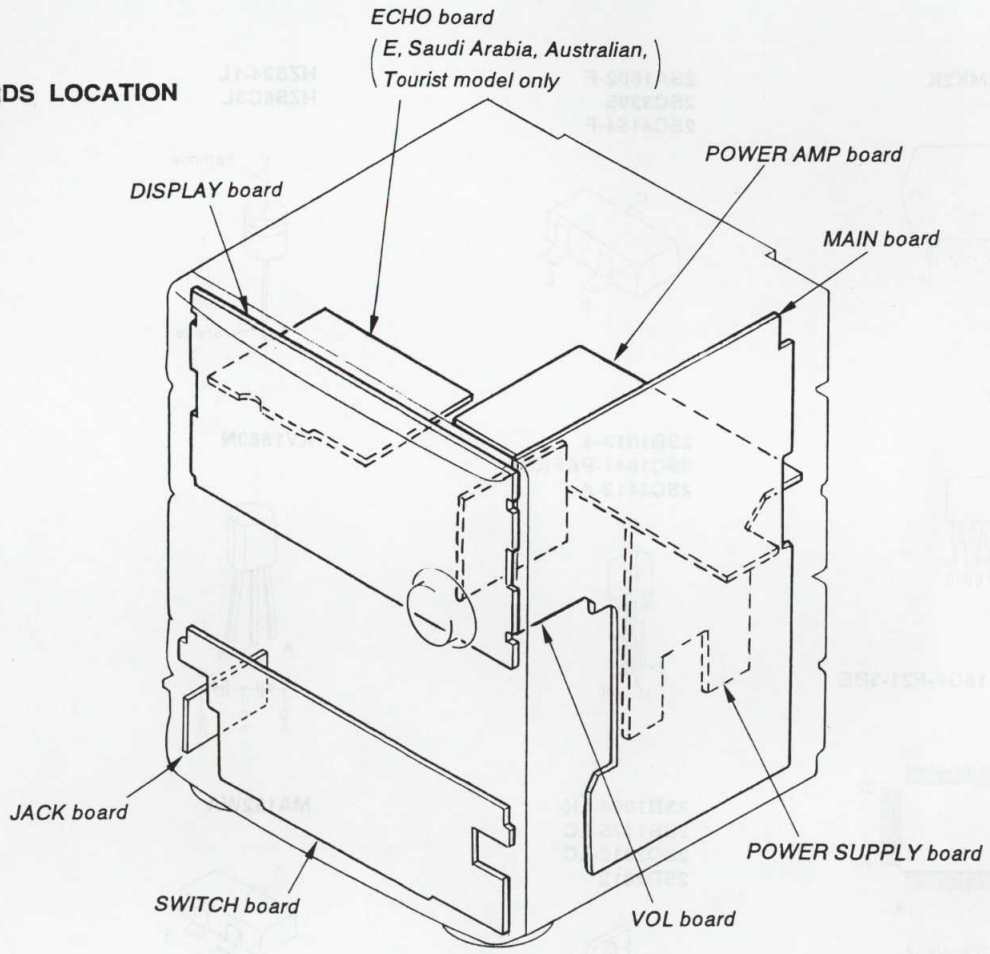

- **CD DECK SECTION**

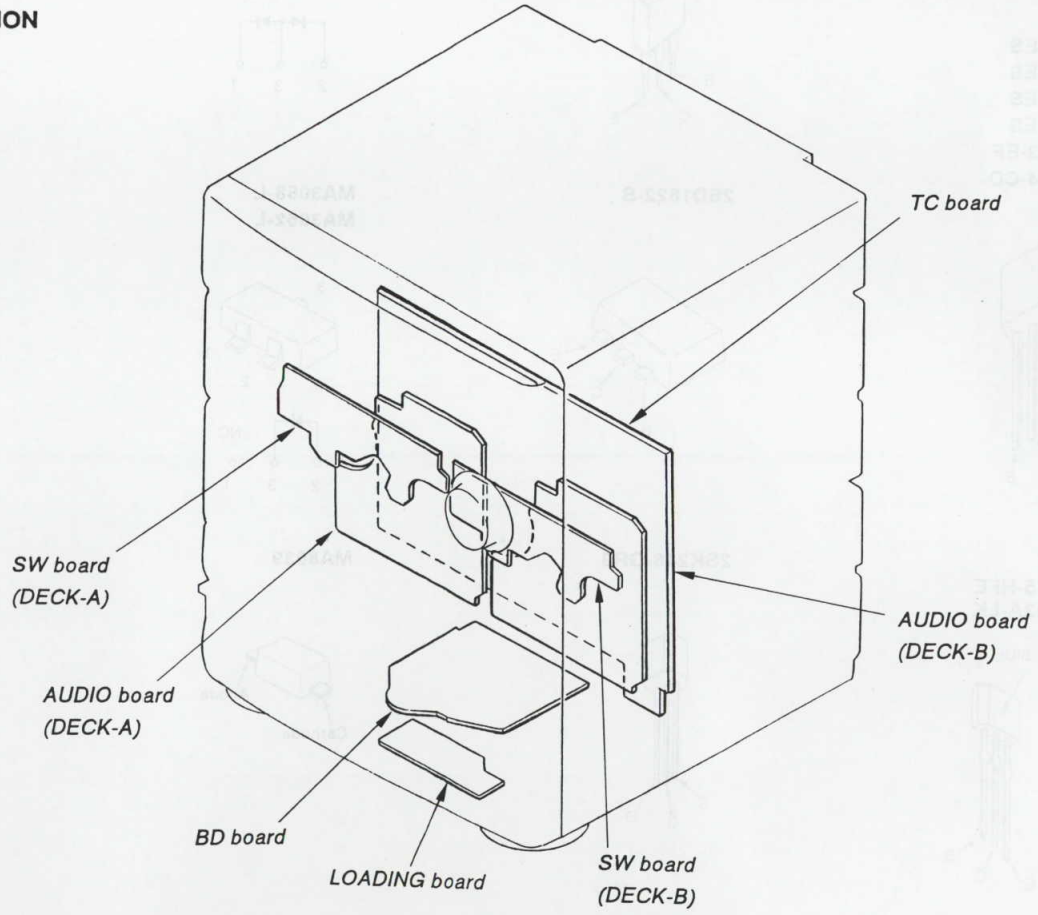

Global electronic heritage manuals

www.freeservicemanuals.info

3/4/2014

3-3. IC BLOCK DIAGRAM (MAIN SECTION)

IC1 LC7218

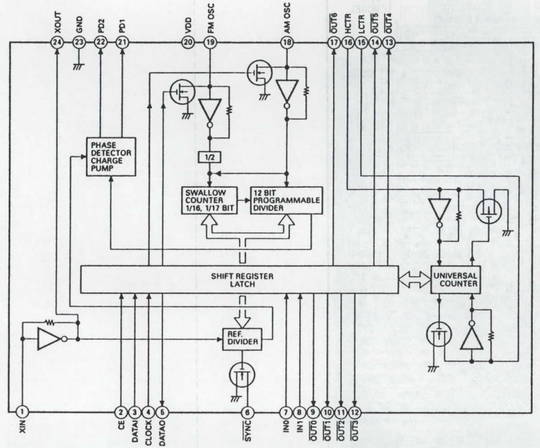

IC2 LA1831

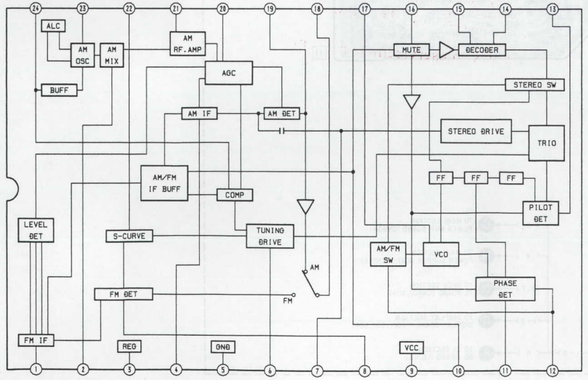

IC581 M50253PK

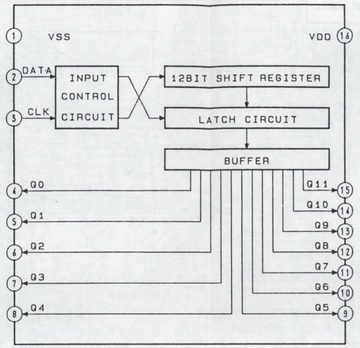

IC602 MC14052BCP

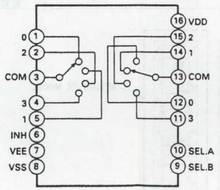

IC607 CXA1492BQ

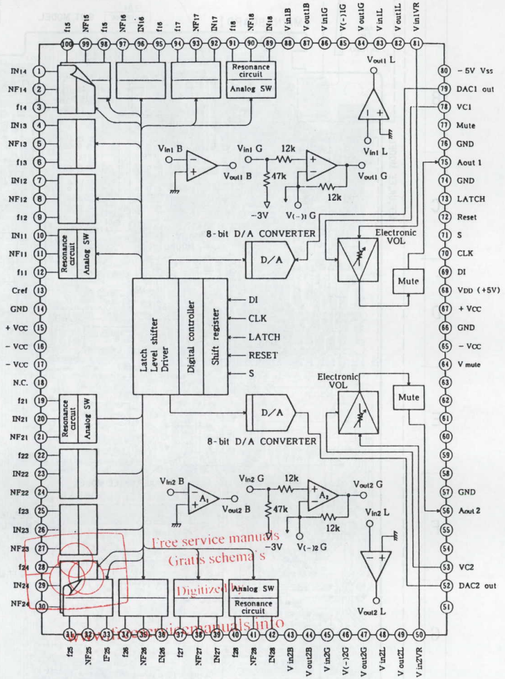

IC609 LA5601

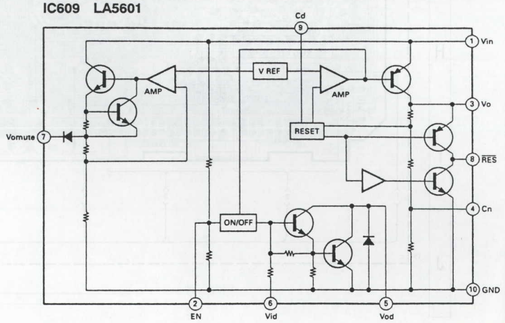

IC610 M65831PK

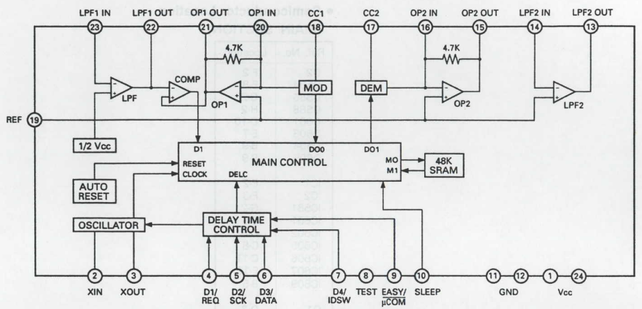

IC802 µPC1237HA

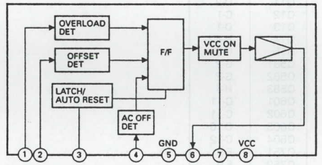

IC901 M5230L-A

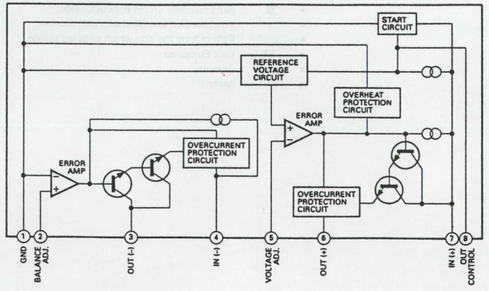

Free service manuals
Gratis schema's
Digitized by
www.freeservicemanuals.info

Global electronic heritage manuals

www.freeservicemanuals.info

3-4. PRINTED WIRING BOARDS (MAIN SECTION)

– AEP, UK, East European German, Italian MODEL –

• See page 6 for Semiconductor lead layouts and 8 for circuit boards location.

• Semiconductor Location (MAIN SECTION)

Ref. No.	Location
D2	F-2
D584	E-8
D586	G-2
D588	H-2
D601	D-10
D603	E-7
D604	B-9
D605	B-9
IC1	E-2
IC2	F-3
IC581	G-2
IC601	C-6
IC602	D-6
IC605	C-8
IC606	C-11
IC607	E-10
IC609	B-5
Q1	D-2
Q3	D-3
Q4	D-3
Q5	D-4
Q6	B-3
Q7	B-3
Q8	D-3
Q9	B-4
Q10	C-2
Q11	D-2
Q12	C-1
Q13	D-1
Q14	H-4
Q15	G-3
Q581	G-2
Q582	G-2
Q583	H-4
Q601	C-11
Q602	C-11
Q603	C-10
Q604	C-12
Q751	E-9
Q752	E-9

Note on Printed Wiring Board:

- ○——— : parts extracted from the component side.
- ■ : parts mounted on the conductor side.
- ⊡← : indicates side identified with part number.
- ▨ : Pattern from the side which enables seeing.
- EE : East European
- G : German
- IT : Italian

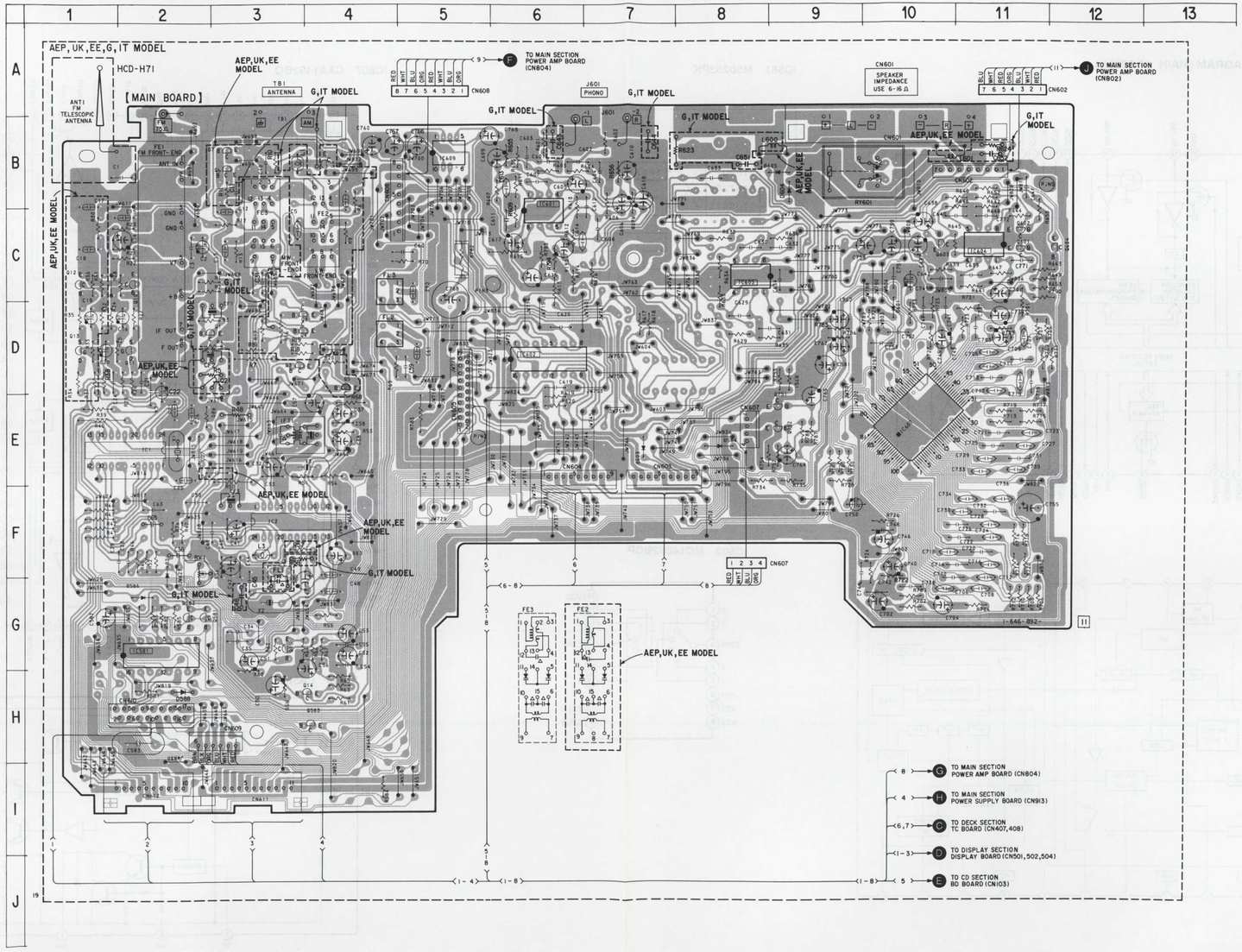

Global electronic heritage manuals

www.freeservicemanuals.info

3-5. SCHEMATIC DIAGRAM (MAIN SECTION) – AEP, UK, East European German, Italian Model –

• See page 9 for IC block diagram.

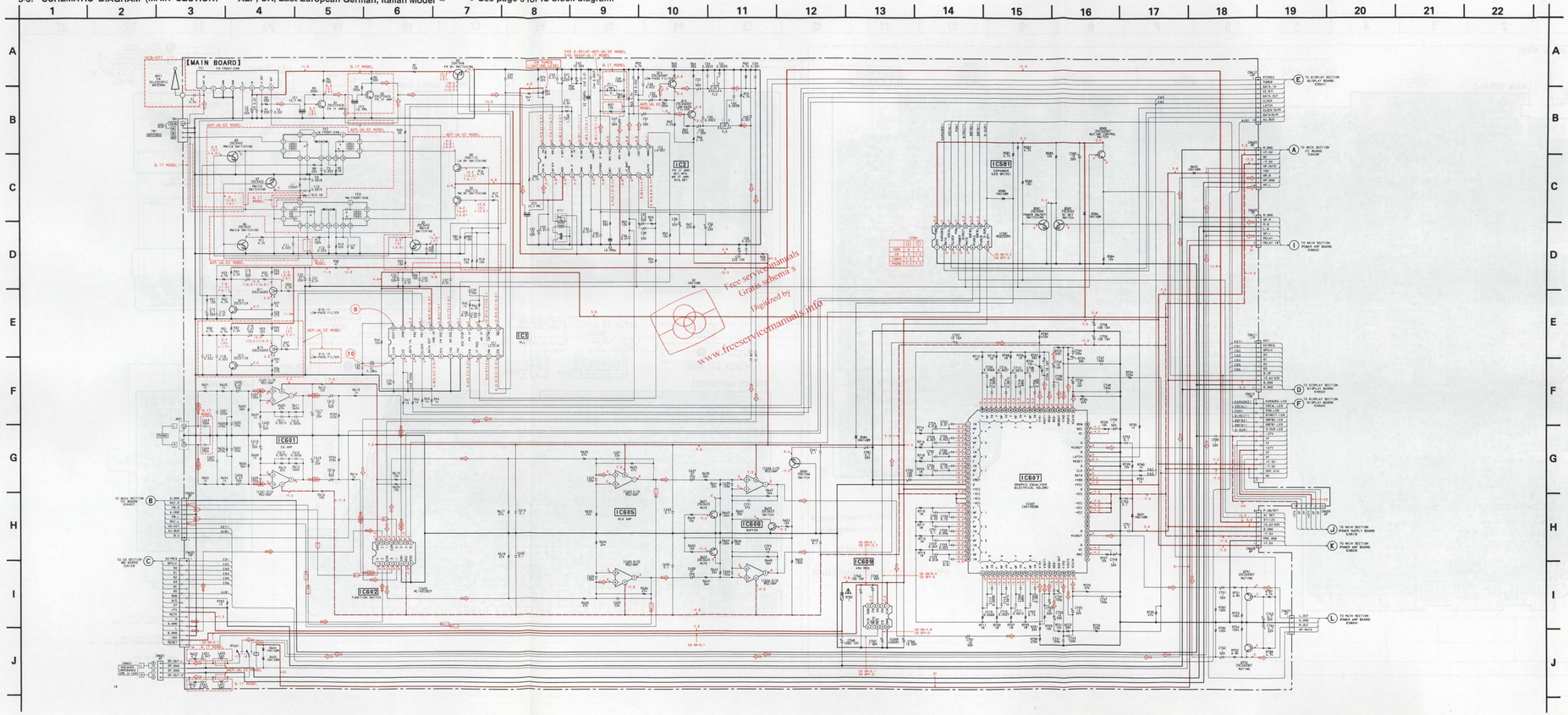

Free service manuals
Gratis schema's
Digitized by
www.freeservicemanuals.info

Global electronic heritage manuals

• WAVEFORMS

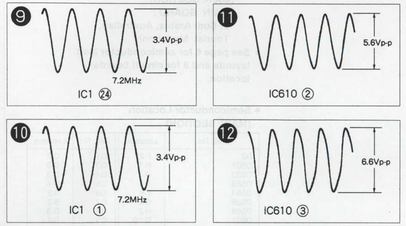

Note
⑪, ⑫: E, East European, Tourist model only.

Note on Schematic Diagram:

- All capacitors are in µF unless otherwise noted. pF: µµF 50 WV or less are not indicated except for electrolytics and tantalums.
- All resistors are in Ω and ¼ W or less unless otherwise specified.
- △ : internal component.
- ⊸⊸ : fusible resistor.

Note: The components identified by mark ⚠ or dotted line with mark ⚠ are critical for safety.
Replace only with part number specified.

- ▬▬ : B + Line.
- ▬ ▬ ▬ : B – Line.
- ▭ : adjustment for repair.
- Voltages and waveforms are dc with respect to ground under no-signal (detuned) conditions.
  no mark :FM
  ( ) :MW
  < > :SW
- Voltages are taken with a VOM (10 MΩ/V).
  Voltage variations may be noted due to normal production tolerances.
- Waveforms are taken with a oscilloscope.
  Voltage variations may be noted due to normal production tolerances.
- Circled numbers refer to waveforms.
- Signal path.
  ⇨ : FM
  ⇨ : CD
  ⇨⇨⇨ : PHONO
  ⊃ : TAPE (PB)
  ⊃ : TAPE (REC)
- EE : East European
- G : German
- IT : Italian

Free service manuals
Gratis schema's
Digitized by
www.freeservicemanuals.info

www.freeservicemanuals.info

3-6. PRINTED WIRING BOARDS (MAIN SECTION)

– MAIN BOARD : E, Sudi Arabia, Australian, Tourist Model only –

• See page 6 for semiconductor lead layouts and 8 for circuit boards location.

• **Semiconductor Location (MAIN SECTION)**

Ref. No.	Location	Ref. No.	Location
D2	F-2	Q1	D-2
D581	H-1	Q3	D-3
D582	H-1	Q4	D-3
D583	H-1	Q5	D-4
D584	E-8	Q6	B-3
D586	G-2	Q7	B-3
D588	H-2	Q8	D-3
D601	D-10	Q9	B-4
D603	E-7	Q10	C-2
D604	B-9	Q11	D-2
D605	B-9	Q14	H-4
D610	B-13	Q15	G-3
D801	H-13	Q581	G-2
D851	H-14	Q582	G-2
D901	F-16	Q583	H-4
D902	F-16	Q601	C-11
D903	G-17	Q602	C-11
D904	G-17	Q603	C-10
D905	G-18	Q604	C-12
D906	G-18	Q751	E-9
D907	G-14	Q752	E-9
D908	F-13	Q801	H-13
D909	G-15	Q802	H-14
D910	G-14	Q850	H-14
D911	G-18	Q901	F-14
(POWER AMP BOARD)		Q902	G-15
D911	C-19	Q903	I-16
(POWER SUPPLY BOARD)		Q904	I-17
D912	D-18	Q905	F-13
D913	C-17	Q906	G-13
		Q907	G-14
IC1	E-2	Q908	F-13
IC2	F-3	Q909	F-14
IC250	G-21	Q911	D-18
IC581	G-2	Q912	C-18
IC802	D-6		
(MAIN BOARD)			
IC802	D-15		
(ECHO BOARD)			
IC803	D-8		
IC804	B-8		
IC805	C-8		
IC806	C-11		
IC807	E-10		
IC809	B-5		
IC810	B-15		
IC901	I-15		
IC802	H-13		
IC901	G-15		

Note on Printed Wiring Board:

- ○—○ : parts extracted from the component side.
- ■ : parts mounted on the conductor side.
- ⊡ : indicates side identified with part number.
- ▒ : Pattern from the side which enables seeing.
- EE : East European
- G : German
- IT : Italian
- EA : Saudi Arabia
- AUS : Australian
- JE : Tourist

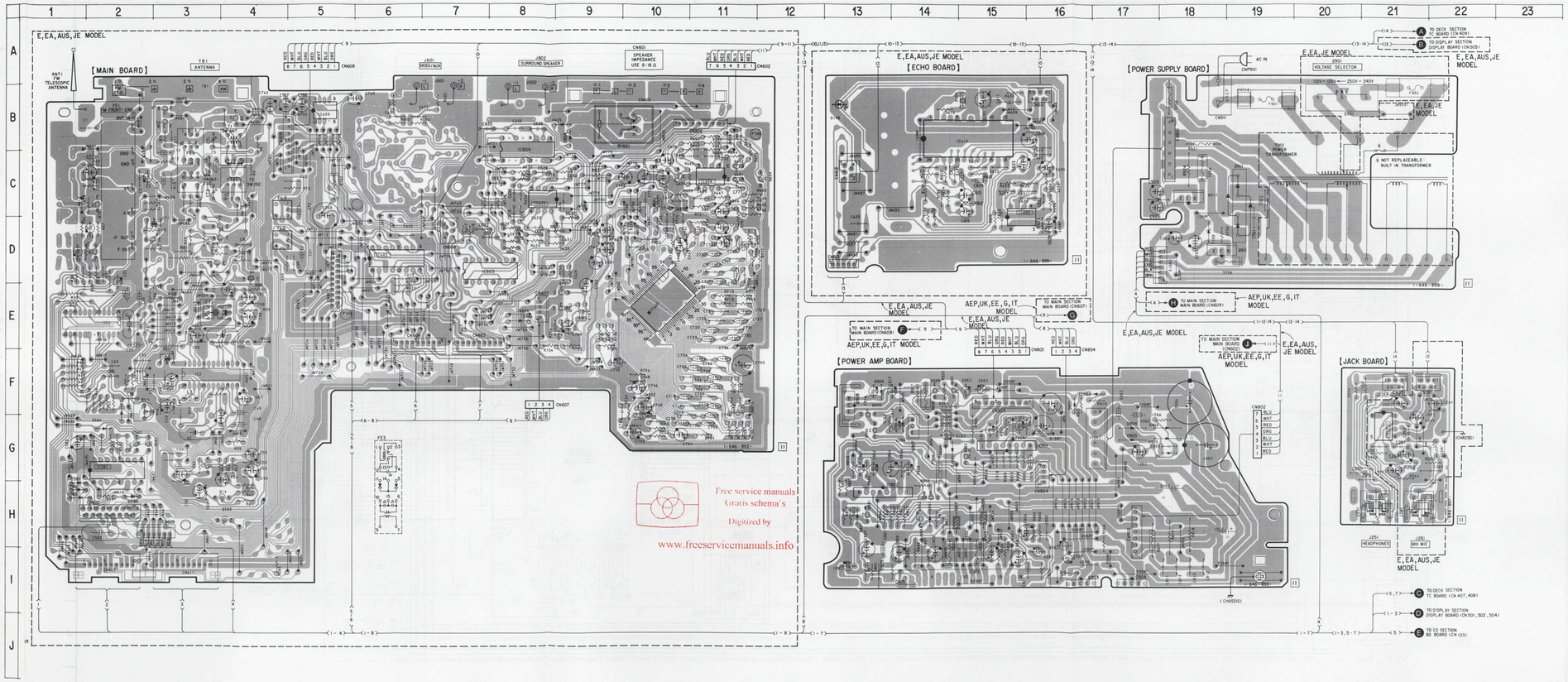

Global electronic heritage manuals

www.freeservicemanuals.info

3-7. SCHEMATIC DIAGRAM (MAIN SECTION) – MAIN BOARD :E, Saudi Arabia, Australian, Tourist Model – • See page 9 for IC block diagram and 18 for waveforms.

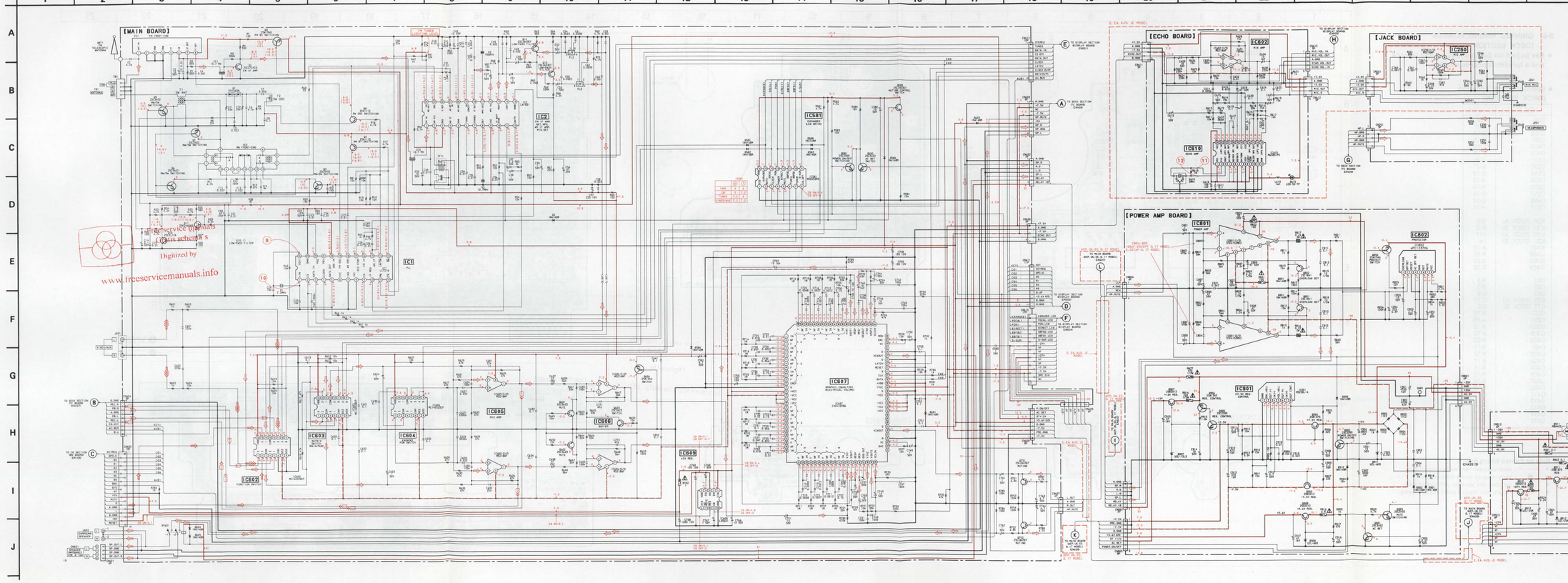

Free service manuals
Circuits schema's
Digitized by
www.freeservicemanuals.info

Note on Schematic Diagram:

- All capacitors are in μF unless otherwise noted. pF: μμF 50 WV or less are not indicated except for electrolytics and tantalums.
- All resistors are in Ω and ¼ W or less unless otherwise specified.
- △ : internal component.
- ▭ : nonflammable resistor.
- ⊸ : fusible resistor.

Note: The components identified by mark ⚠ or dotted line with mark ⚠ are critical for safety. Replace only with part number specified.

- ▬ : B + Line.
- ▬ ▬ : B – Line.
- ▭ : adjustment for repair.
- Voltages and waveforms are dc with respect to ground under no-signal (detuned) conditions.
  no mark :FM
  ( ) :MW
  < > :SW
- Voltages are taken with a VOM (10 MΩ/V).
  Voltage variations may be noted due to normal production tolerances.
- Waveforms are taken with a oscilloscope.
  Voltage variations may be noted due to normal production tolerances.
- Circled numbers refer to waveforms.
- Signal path.
  ⇨ : FM
  ⇨ : CD
  ⇨ : PHONO
  ⇨ : TAPE (PB)
  ⇨ : TAPE (REC)
- EE : East European
- G : German
- IT : Italian
- EA : Saudi Arabia
- AUS : Australian
- JE : Tourist

Global electronic heritage manuals

www.freeservicemanuals.info

3/1/2014

3-8. ORINTED WIRING BOARDS (DECK SECTION)

• See page 6 for Semiconductor lead layouts and 8 for circuit boards location.

• **Semiconductor Location (DECK SECTION)**

Ref. No.	Location
D31	C-2
D301	E-17
D302	D-17
D351	B-15
D402	E-19
D403	E-17
D551	G-21
D552	G-21
D553	G-19
D555	G-18
D556	H-18
D557	G-15
D558	G-14
D559	H-18
IC31 (DECK A)	D-9
IC31 (DECK B)	D-3
IC81 (DECK A)	I-11
IC81 (DECK B)	I-5
IC401	B-16
IC402	B-15
IC403	B-20
IC404	C-15
Q51	B-3
Q52	B-3
Q53	C-3
Q71 (DECK A)	C-11
Q71 (DECK B)	C-5
Q101	B-18
Q201	A-18
Q305	A-15
Q306	E-16
Q400	D-20
Q401	B-17
Q402	B-18
Q403	B-17
Q404	B-16
Q405	B-15
Q407	B-15
Q408	E-18
Q411	E-18
Q412	E-17
Q413	C-17
Q414	C-17
Q415	B-17

Note on Printed Wiring Board:

- ○——: parts extracted from the component side.
- ■ : parts mounted on the conductor side.
- ⬚ : indicates side identified with part number.
- ▨ : Pattern from the side which enables seeing.

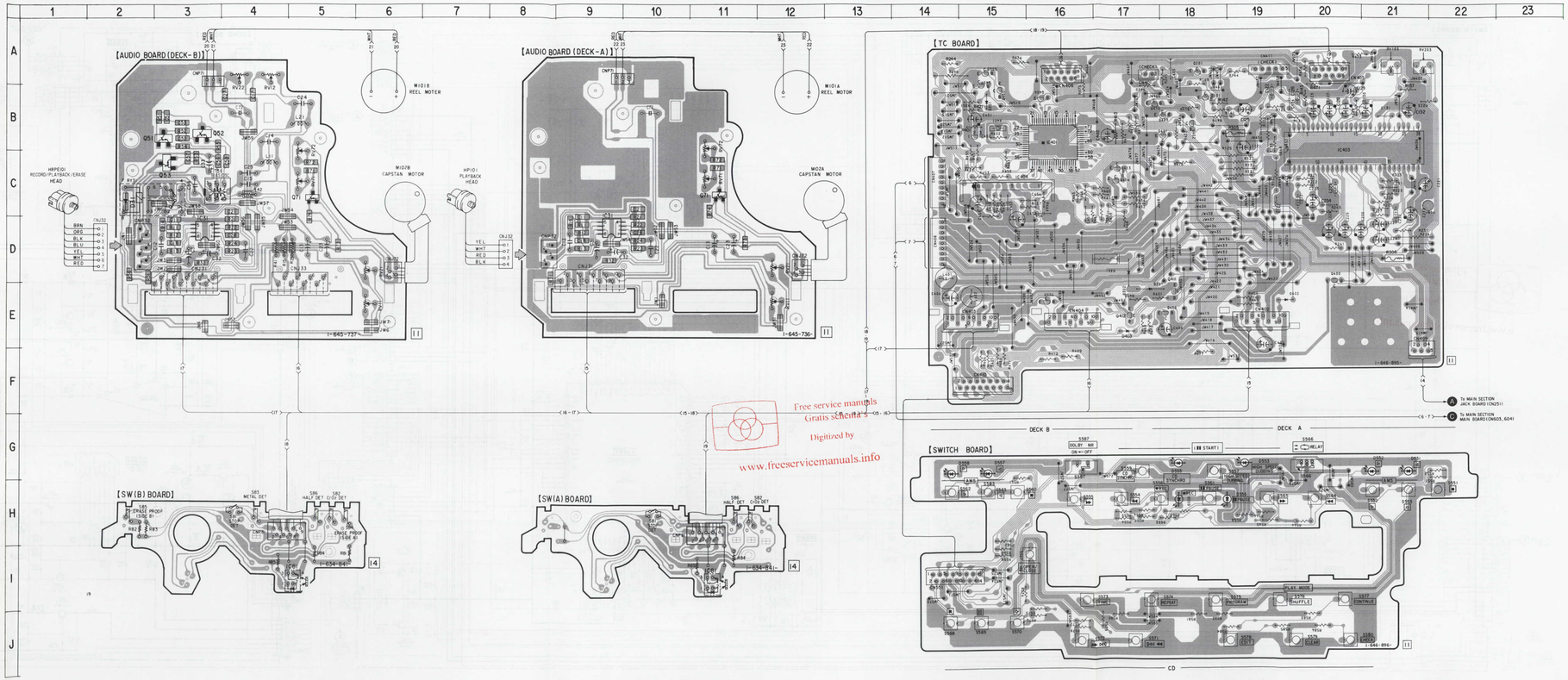

Global electronic heritage manuals

www.freeservicemanuals.info

3-9. SCHEMATIC DIAGRAM (DECK SECTION)

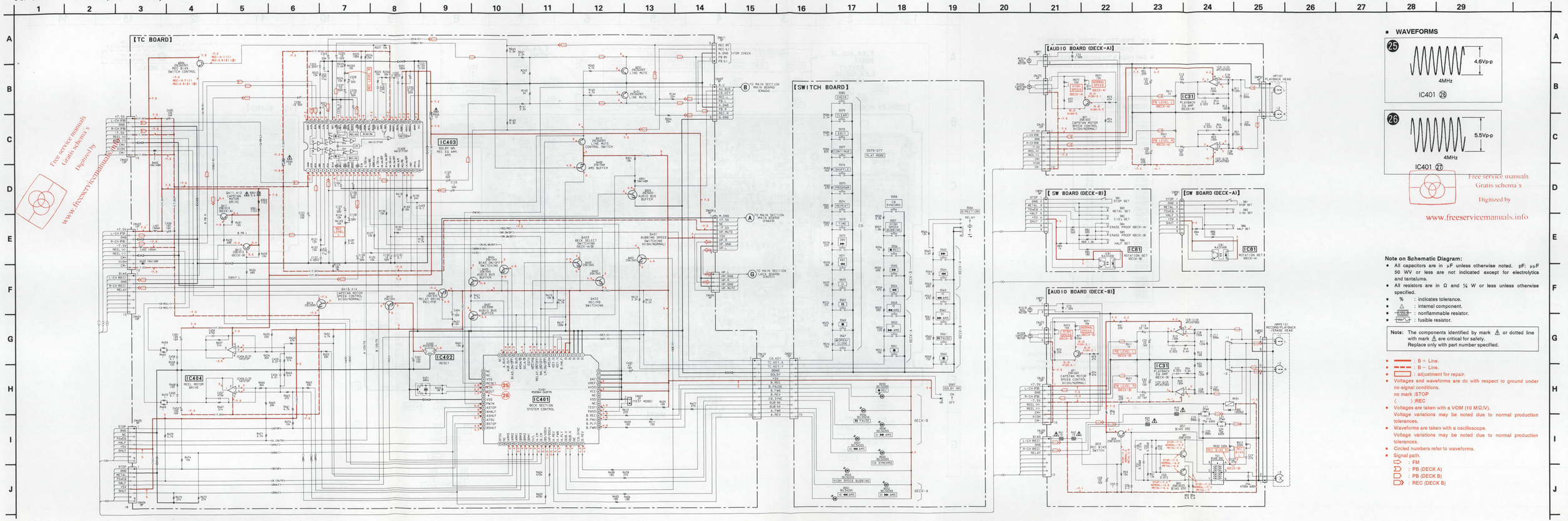

Free service manuals
Gratis schema's
Digitized by
www.freeservicemanuals.info

- **WAVEFORMS**

Note on Schematic Diagram:

- All capacitors are in μF unless otherwise noted. pF: μμF 50 WV or less are not indicated except for electrolytics and tantalums.
- All resistors are in Ω and ¼ W or less unless otherwise specified.
- % : indicates tolerance.
- △ : internal component.
- ⊘ : nonflammable resistor.
- ⊣⊢ : fusible resistor.

Note: The components identified by mark △ or dotted line with mark △ are critical for safety. Replace only with part number specified.

- ▬▬ : B + Line.
- ▬ ▬ : B − Line.
- ▭ : adjustment for repair.
- Voltages and waveforms are dc with respect to ground under no-signal conditions.
  no mark :STOP
  ( ) :REC
- Voltages are taken with a VOM (10 MΩ/V).
  Voltage variations may be noted due to normal production tolerances.
- Waveforms are taken with a oscilloscope.
  Voltage variations may be noted due to normal production tolerances.
- Circled numbers refer to waveforms.
- Signal path.
  ⇨ : FM
  ⊃ : PB (DECK A)
  ⊃ : PB (DECK B)
  ⊃ : REC (DECK B)

Global electronic heritage manuals

www.freeservicemanuals.info

3-10. PRINTED WIRING BOARDS (DISPLAY SECTION)

- See page 6 for semiconductor lead layouts and 8 for circuit boards location.

- Semiconductor Location (DISPLAY SECTION)

Ref. No.	Location
D501	E-4
D502	D-2
D504	D-8
D506	F-3
D507	E-7
D508	D-7
D510 (E, EA, AUS, JE)	C-3
D511	C-4
D512	C-5
D514	B-7
D515	C-2
D516	C-1
D517	B-7
D520	E-4
D590	C-3
D591	C-4
IC200	C-12
IC501	E-5
IC502	E-3
IC503	E-4
IC504	F-2
IC505	C-5
IC507	C-3
IC508	C-4
Q501	E-4
Q502	F-3
Q503	E-4
Q507	E-6

Note on Printed Wiring Board:

- ○——— : parts extracted from the component side.
- ■ : parts mounted on the conductor side.
- ▒▒▒ : Pattern from the side which enables seeing.
- EE : East European
- G : German
- IT : Italian
- EA : Saudi Arabia
- AUS : Australian
- JE : Tourist

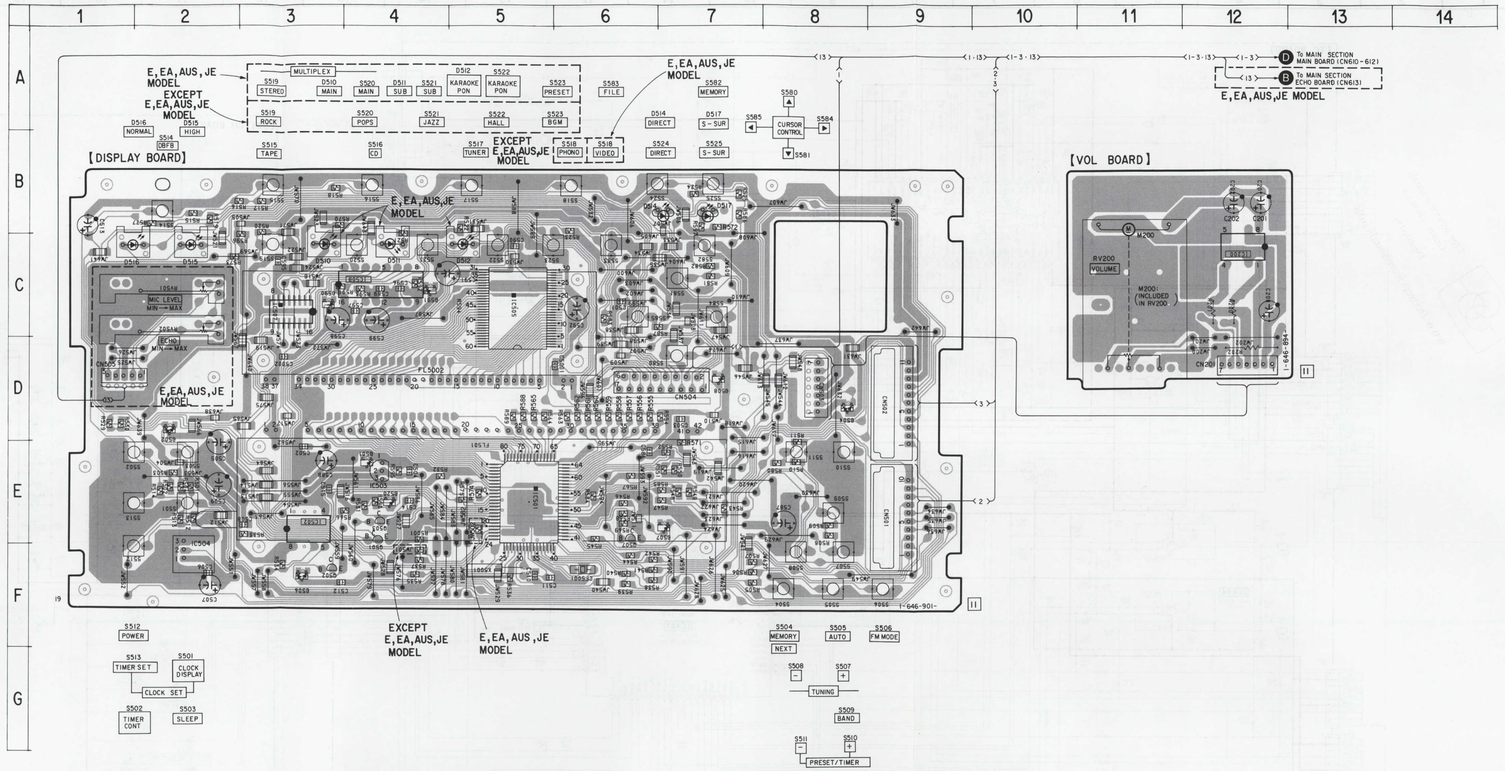

Global electronic heritage manuals

www.freeservicemanuals.info

3-11. SCHEMATIC DIAGRAM (DISPLAY SECTION)

Free service manuals
Gratis schema's
Digitized by
www.freeservicemanuals.info

- **WAVEFORMS**

Note on Schematic Diagram:

- All capacitors are in μF unless otherwise noted. pF: μμF 50 WV or less are not indicated except for electrolytics and tantalums.
- All resistors are in Ω and ¼ W or less unless otherwise specified.
- △ : internal component.
- ▬▬▬ : B + Line.
- ▬ ▬ ▬ : B − Line.
- Voltages and waveforms are dc with respect to ground under no-signal conditions.
  no mark :STOP
- Voltages are taken with a VOM (10 MΩ/V).
  Voltage variations may be noted due to normal production tolerances.
- Waveforms are taken with a oscilloscope.
  Voltage variations may be noted due to normal production tolerances.
- Circled numbers refer to waveforms.
- EE : East European
- G : German
- IT : Italian
- EA : Saudi Arabia
- AUS : Australian
- JE : Tourist

3-12. IC BLOCK DIAGRAM (DISPLAY SECTION)

IC200 LB1639

IC502 X24C01P

IC508 XR1091DCP

IC507 CD4052BCM

Global electronic heritage manuals

www.freeservicemanuals.info

3/1/2014

3-13. IC BLOCK DIAGRAM (CD SECTION)

IC101 CXA1372AQ

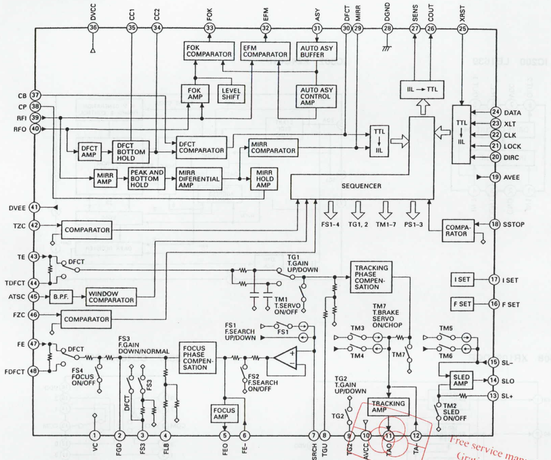

IC201 CXD2500BQ

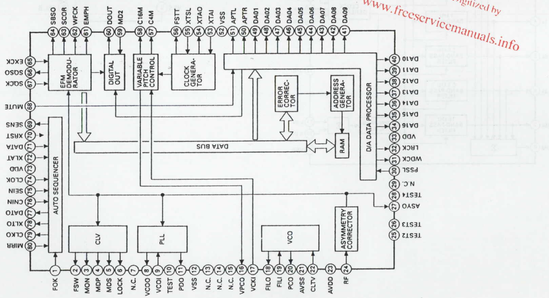

IC103 M54641FP

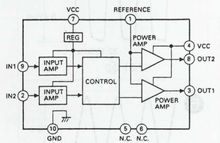

IC203 MSM6538-01GS-VKR1

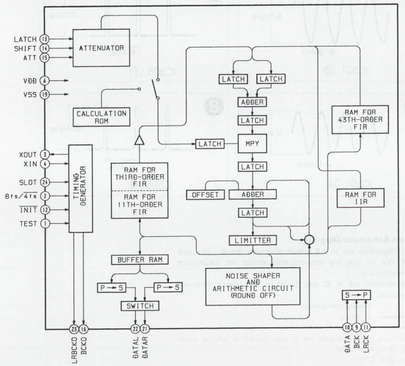

Free service manuals
Gratis schema's
Digitized by
www.freeservicemanuals.info

3-14. PRINTED WIRING BOARDS (CD SECTION)

- See page 6 for semiconductor lead layouts and 8 for circuit boards location.

- Semiconductor Location (CD SECTION)

Ref. No.	Location
D101	I-4
D201	J-2
IC101	G-3
IC102	H-3
IC103	J-3
IC201	C-3
IC202	H-2
IC203	C-2
IC301	B-2
IC302	B-1
Q101	G-2
Q201	J-3

Note on Printed Wiring Board:

- ○——○ : parts extracted from the component side.
- ● : Through hole.
- ▩ : Pattern from the side which enables seeing.

(The other layers' patterns are not indicated.)

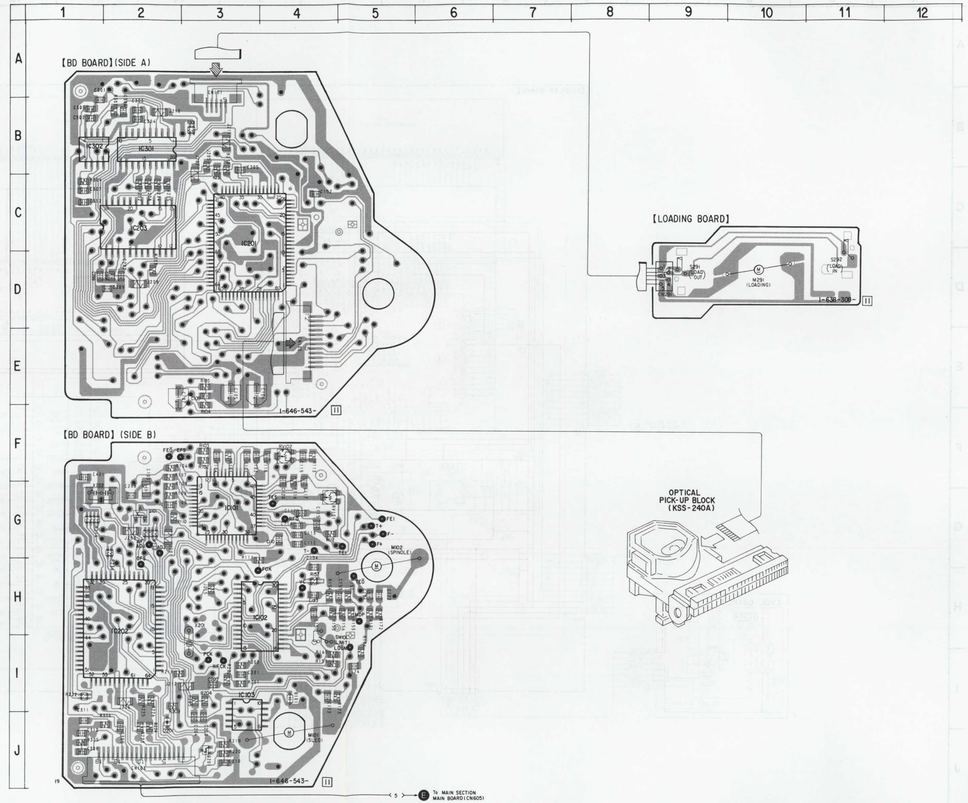

Global electronic heritage manuals

www.freeservicemanuals.info

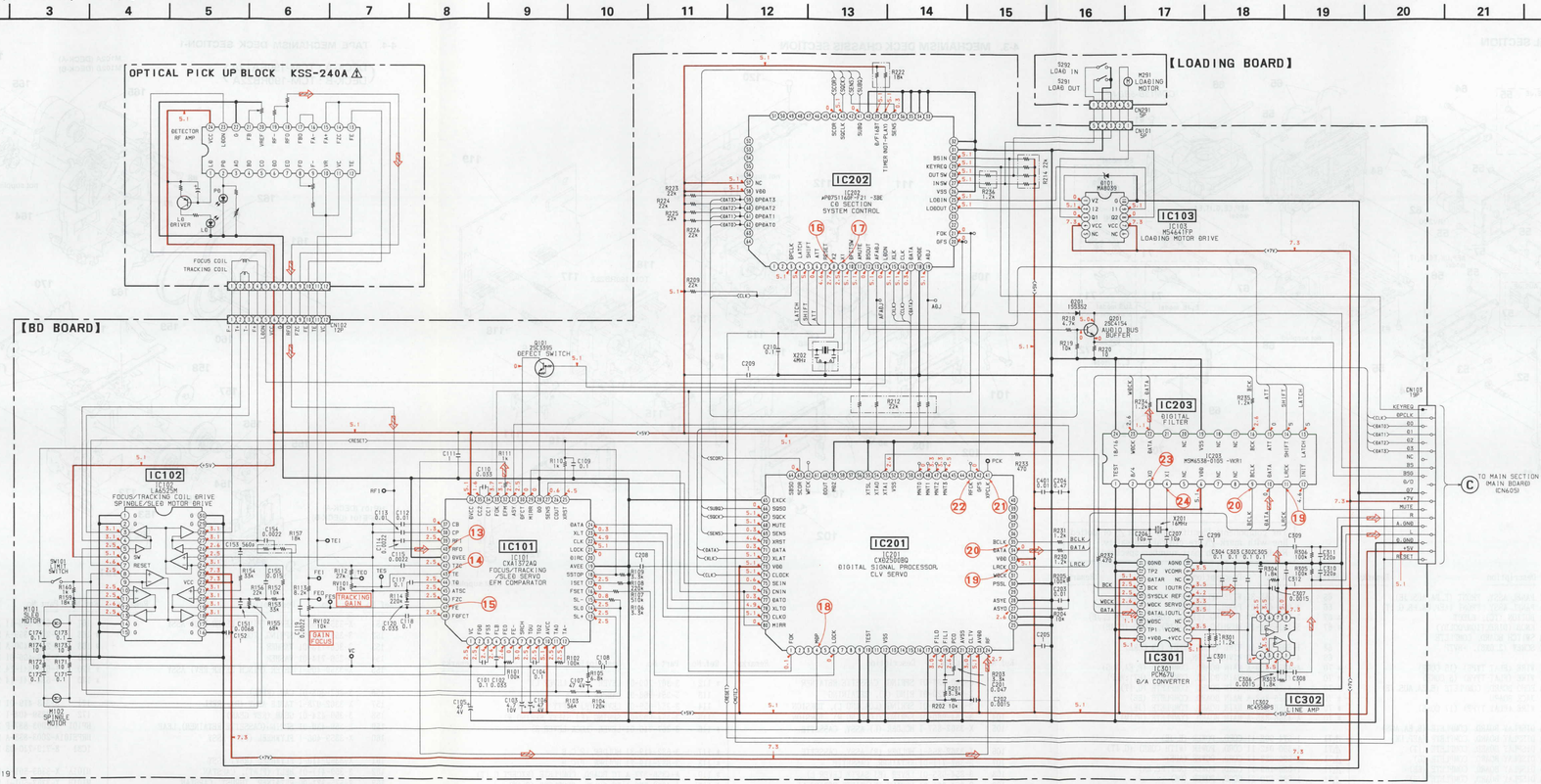

• WAVEFORMS

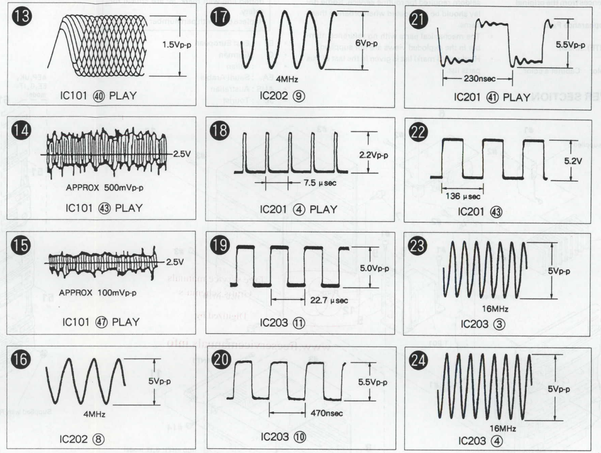

Note on Schematic Diagram:

- All capacitors are in µF unless otherwise noted. pF: µµF 50 WV or less are not indicated except for electrolytics and tantalums.
- All resistors are in Ω and ¼ W or less unless otherwise specified.
- △ : internal component.

Note: The components identified by mark ⚠ or dotted line with mark ⚠ are critical for safety. Replace only with part number specified.

- ▬▬ : B + Line.
- ▭ : adjustment for repair.
- Voltages and waveforms are dc with respect to ground under no-signal (detuned) conditions. no mark :PLAY
- Voltages are taken with a VOM (10 MΩ/V). Voltage variations may be noted due to normal production tolerances.
- Waveforms are taken with a oscilloscope. Voltage variations may be noted due to normal production tolerances.
- Circled numbers refer to waveforms.
- Signal path. ⇨ : CD

Global electronic heritage manuals

www.freeservicemanuals.info

SECTION 4
EXPLODED VIEWS

NOTE:
- -XX, -X mean standardized parts, so they may have some differences from the original one.
- Color Indication of Appearance Parts
  Example:
  KNOB,BALANCE(WHITE)...(RED)
  ↑ Parts color ↑ Cabinet's color
- Items marked "*" are not stocked since they are seldom required for routine service. Some delay should be anticipated when ordering these items.
- The mechanical parts with no reference number in the exploded views are not supplied.
- Hardware(# mark) list is given in the last of this parts list.

The components identified by mark ⚠ or dotted line with mark ⚠ are critical for safety.
Replace only with part number specified.

- EE : East European
- G : German
- IT : Italian
- EA : Saudi Arabia
- AUS : Australian
- JE : Tourist

4-1. CASE, POWER SECTION

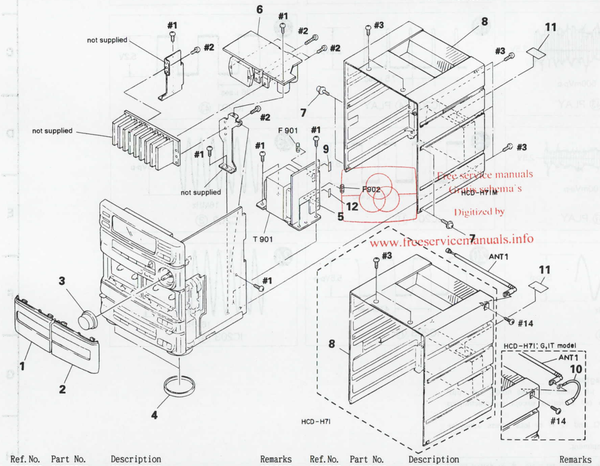

Ref.No.	Part No.	Description	Remarks
1	X-4943-321-1	LID (A) ASSY, CASSETTE (EXCEPT JE)	
1	X-4943-663-1	LID (A) ASSY, CASSETTE (JE)	
2	X-4943-322-1	LID (BKE) ASSY, CASSETTE (E, EA, AUS)	
2	X-4943-323-1	LID (BAE) ASSY, CASSETTE (HT1:AEP, EE, G, IT)	
2	X-4943-327-1	LID (BMAE) ASSY, CASSETTE (HT1M)	
2	X-4943-664-1	LID (BKE) ASSY, CASSETTE (JE)	
3	4-956-480-01	KNOB (VOLUME)	
4	4-936-827-12	ORNAMENT (FOOT)	
* 5	1-646-898-11	POWER SUPPLY BOARD	
* 6	A-4356-864-A	POWER AMP BOARD, COMPLETE (E, EA, AUS, JE)	
* 6	A-4356-865-A	POWER AMP BOARD, COMPLETE (AEP, UK, EE)	
* 6	A-4356-866-A	POWER AMP BOARD, COMPLETE (G, IT)	
7	3-704-366-01	SCREW (CASE) (M3X8)	
* 8	4-956-470-11	CASE (HT1:AEP, EE, G, IT)	
* 8	4-956-499-01	CASE (HT1M)	
8	4-956-266-1	CASE ASSY (E, EA, JE)	
8	X-4943-269-1	CASE ASSY (AUS)	
8	X-4943-270-1	CASE ASSY (HT1:AEP, EE, G, IT)	
9	3-701-947-14	LABEL (T2A), FUSE (E, EA, AUS)	
10	1-501-594-21	ANTENNA (FM) (G, IT)	
* 11	4-941-548-01	LABEL, CLASS 1	
12	3-701-947-12	LABEL (T1.25A), FUSE	
ANT1	1-501-321-51	ANTENNA, TELESCOPIC (H71)	
⚠F901	1-532-285-00	FUSE (T1.25A 250V)	
⚠F902	1-532-203-00	FUSE (T2A 250V) (E, EA, JE)	
⚠T901	1-423-471-11	TRANSFORMER, POWER (AEP, EE, G, IT)	
⚠T901	1-423-472-11	TRANSFORMER, POWER (AUS, UK)	
⚠T901	1-423-473-11	TRANSFORMER, POWER (E, EA, JE)	

4-2. FRONT PANEL SECTION

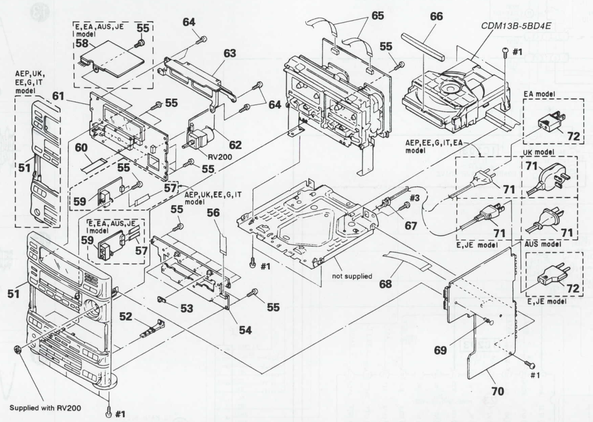

The components identified by mark ⚠ or dotted line with mark ⚠ are critical for safety.
Replace only with part number specified.

Ref.No.	Part No.	Description	Remarks
51	X-4943-315-1	PANEL ASSY, FRONT (E, EA, AUS, JE)	
51	X-4943-316-1	PANEL ASSY, FRONT (AEP, UK, EE, G, IT)	
52	4-956-477-01	BUTTON (TC), EJECT	
53	4-956-476-01	KNOB (DIRECTION/DOLBY)	
* 54	A-4356-879-A	SWITCH BOARD, COMPLETE	
55	4-951-620-01	SCREW (2.6X8), +BVTP	
56	1-696-922-11	WIRE (FLAT TYPE) (15 CORE)	
57	1-696-923-11	WIRE (FLAT TYPE) (5 CORE)	
* 58	A-4356-880-A	ECHO BOARD, COMPLETE (E, EA, AUS, JE)	
* 59	1-646-897-11	JACK BOARD	
60	1-690-102-11	WIRE (FLAT TYPE) (17 CORE)	
* 61	A-4356-872-A	DISPLAY BOARD, COMPLETE (E, EA, AUS)	
* 61	A-4356-873-A	DISPLAY BOARD, COMPLETE (AEP, UK)	
* 61	A-4356-874-A	DISPLAY BOARD, COMPLETE (IT)	
* 61	A-4356-875-A	DISPLAY BOARD, COMPLETE (G)	
* 61	A-4356-876-A	DISPLAY BOARD, COMPLETE (EE)	
* 61	A-4360-447-A	DISPLAY BOARD, COMPLETE (JE)	
* 62	1-646-894-11	VOL BOARD	
* 63	4-956-469-01	BRACKET (CASE)	
64	4-951-620-11	SCREW (2.6X10), +BVTP	
65	1-690-588-31	WIRE (FLAT TYPE) (9 CORE)	
66	4-956-474-01	PANEL, LOADING	
* 67	3-703-244-00	BUSHING (2104), CORD (EXCEPT E, JE)	
* 67	3-703-571-11	BUSHING (S) (4516), CORD (E, JE)	
68	1-696-921-11	WIRE (FLAT TYPE) (19 CORE)	
69	4-812-134-00	RIVET NYLON, 3.5	
* 70	A-4356-859-A	MAIN BOARD, COMPLETE (E, EA, AUS)	
* 70	A-4356-860-A	MAIN BOARD, COMPLETE (HT1:AEP)	
* 70	A-4356-861-A	MAIN BOARD, COMPLETE (G, IT)	
* 70	A-4356-862-A	MAIN BOARD, COMPLETE (EE)	
* 70	A-4356-863-A	MAIN BOARD, COMPLETE (JE)	
* 70	A-4356-885-A	MAIN BOARD, COMPLETE (HT1M)	
△71	1-574-902-11	CORD, POWER (E, JE)	
△71	1-590-042-11	CORD, POWER (WITH CORE) (G, IT)	
△71	1-590-083-11	CORD, POWER (AUS)	
△71	1-696-169-11	CORD, POWER (AEP, EE, EA)	
△71	1-696-570-21	CORD, POWER (UK)	
△72	1-569-007-11	ADAPTOR, CONVERSION 2P (E, JE)	
△72	1-569-008-11	ADAPTOR, CONVERSION 2P (EA)	
	RV200	1-223-301-11 RES, VAR. CARBON(WITH MOTOR)10K (VOLUME)	

4-3. MECHANISM DECK CHASSIS SECTION

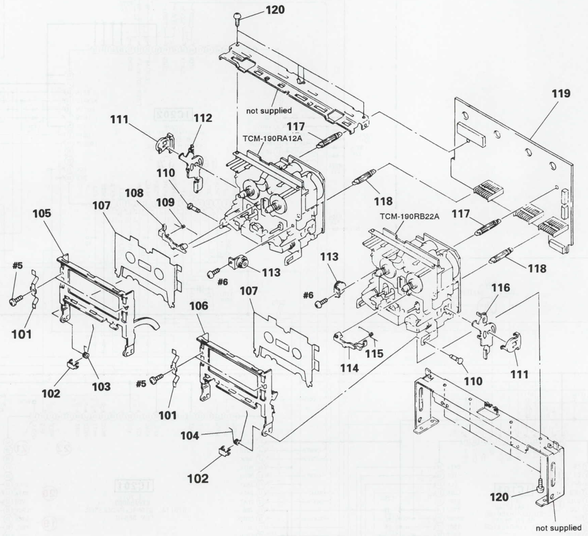

Ref.No.	Part No.	Description	Remarks
101	3-340-137-01	SPRING, CASSETTE RETAINER	
102	3-367-720-01	RING (W), RETAINING	
103	3-354-959-01	SPRING (LOADING L), TORSION	
104	3-354-960-01	SPRING (LOADING R), TORSION	
105	X-3362-857-1	HOLDER (L) ASSY, CASSETTE	
106	X-3362-856-1	HOLDER (R) ASSY, CASSETTE	
107	3-367-711-01	RETAINER, CASSETTE	
108	3-354-955-01	LEVER (EJ SAFTY LEVER L)	
109	3-354-961-01	SPRING (EJ SAFTY SPRING L)	
110	3-367-721-01	SHAFT (FULCRUM SHAFT)	
111	3-354-957-01	JOINT (LOCK LEVER)	
* 112	3-367-709-01	LEVER (LOCK LEVER L)	
113	3-354-963-01	DAMPER	
114	3-354-956-01	LEVER (EJ SAFTY LEVER R)	
115	3-354-962-01	SPRING (EJ SAFTY SPRING R)	
* 116	3-367-710-01	LEVER (LOCK LEVER R)	
* 117	3-682-419-31	HOLDER, P.C.B	
* 118	3-682-419-21	HOLDER, P.C.B	
* 119	A-4356-877-A	TC BOARD, COMPLETE (EXCEPT G, IT)	
* 119	A-4356-878-A	TC BOARD, COMPLETE (G, IT)	
120	4-928-635-01	SCREW, +BV (2.6X8) TAPPING	

4-4. TAPE MECHANISM DECK SECTION-1

(DECK-A : TCM-190RA12A
DECK-B : TCM-190RB22A)

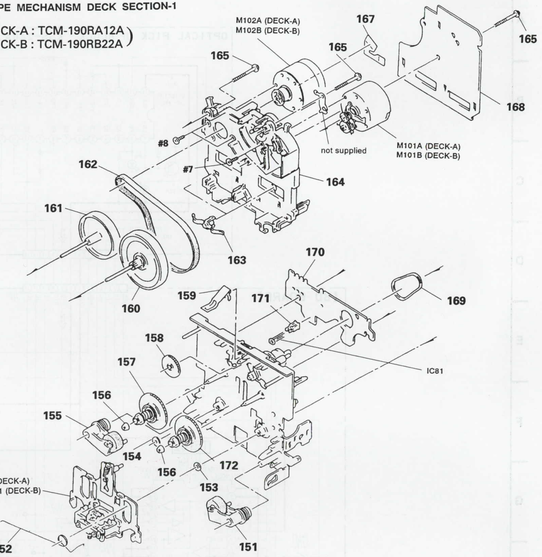

Ref.No.	Part No.	Description	Remarks
151	X-3359-408-1	LEVER (PINCH LEVER FWD) ASSY	
152	3-359-455-01	SPRING, TORSION	
153	3-356-713-01	WASHER	
154	3-356-714-01	WASHER	
155	X-3359-409-1	LEVER (PINCH LEVER REV) ASSY	
156	3-362-308-01	CAP (REEL)	
157	X-3362-073-1	TABLE ASSY (B), REEL	
158	3-359-424-01	GEAR (REV GEAR)	
159	3-359-430-01	SPRING(CASSETTE RETAINER), LEAF	
160	X-3359-406-1	FLYWHEEL (FWD) ASSY	
161	X-3359-410-1	FLYWHEEL (REV) ASSY	
162	3-359-417-01	BELT (FLAT), CAPSTAN	
163	3-575-321-00	RETAINER, THRUST, CAPSTAN	
* 164	3-359-436-01	BASE (THRUST RETAINER), FITTING	
165	3-359-414-01	SCREW (+PTPWH 2X23)	
167	1-638-983-11	PC BOARD, MOTOR FLEXIBLE	
* 168	A-2006-399-A	MOUNTED PCB (RA12A), AUDIO (DECK-A)	
* 168	A-2006-400-A	MOUNTED PCB (RB22A), AUDIO (DECK-B)	
169	3-359-466-01	BELT (FR), SQUARE	
* 170	1-634-841-14	SW BOARD (DECK-A)	
* 170	1-634-841-14	SW BOARD (DECK-B)	
171	3-343-419-01	HOLDER (S SENSOR A)	
172	X-3359-404-1	TABLE ASSY, REEL	
HP101	A-2003-837-F	BASE ASSY, HEAD(DECK-A)	
HRPE101A-2003-838-A		DECK ASSY, HEAD(DECK-B)	
IC81	8-719-710-03	DIODE NJL5165K-B	
M101A	X-3363-501-1	MOTOR ASSY (REEL) (DECK-A)	
M101B	X-3363-501-1	MOTOR ASSY (REEL) (DECK-B)	
M102A	X-3359-417-1	MOTOR ASSY (CAPSTAN) (DECK-A)	
M102B	X-3359-417-1	MOTOR ASSY (CAPSTAN) (DECK-B)	

Global electronic heritage manuals

www.freeservicemanuals.info

4-5. TAPE MECHANISM DECK SECTION-2

(DECK-A : TCM-190RA12A
DECK-B : TCM-190RB22A)

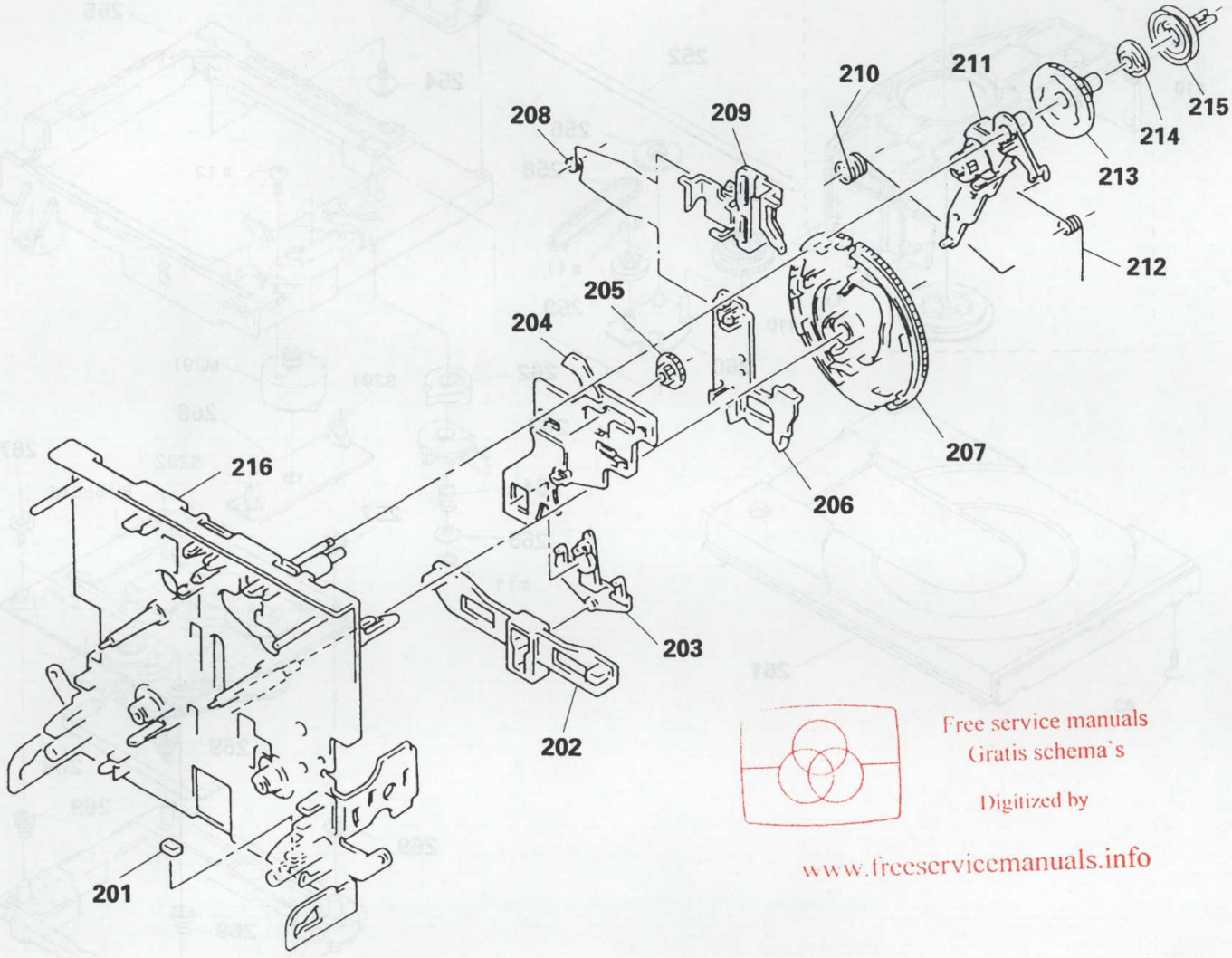

Free service manuals
Gratis schema's
Digitized by
www.freeservicemanuals.info

Ref. No.	Part No.	Description	Remarks
201	3-359-469-01	SPACER	
* 202	3-359-425-01	SLIDER (REVERSE SLIDER)	
203	3-359-426-01	LEVER (REVERSE LEVER)	
* 204	3-359-415-01	SLIDER (TRIGGER SLIDER)	
205	3-359-448-01	GEAR (TRIGGER)	
* 206	3-359-427-01	SLIDER (LEVERSE SLIDER)	
207	3-359-420-01	GEAR (CAM GEAR)	
208	3-359-454-01	SPRING, TORSION	
209	3-359-429-01	SLIDER (BRAKE PLATE)	
210	3-359-456-01	SPRING(TRIGGER SPRING), TORSION	
211	X-3359-405-1	LEVER (FR ARM) ASSY	
212	3-359-453-01	SPRING (FR ARM), TORSION	
213	3-359-419-01	GEAR (FR GEAR)	
214	3-359-421-01	CLUTCH (REEL DISK)	
215	3-359-418-01	PULLEY (FR PULLEY)	
216	X-3363-790-1	CHASSIS ASSY, MECHANICAL	

Global electronic heritage manuals

www.freeservicemanuals.info

4-6. CD MECHANISM DECK SECTION-1

(CDM13B-5BD4E)

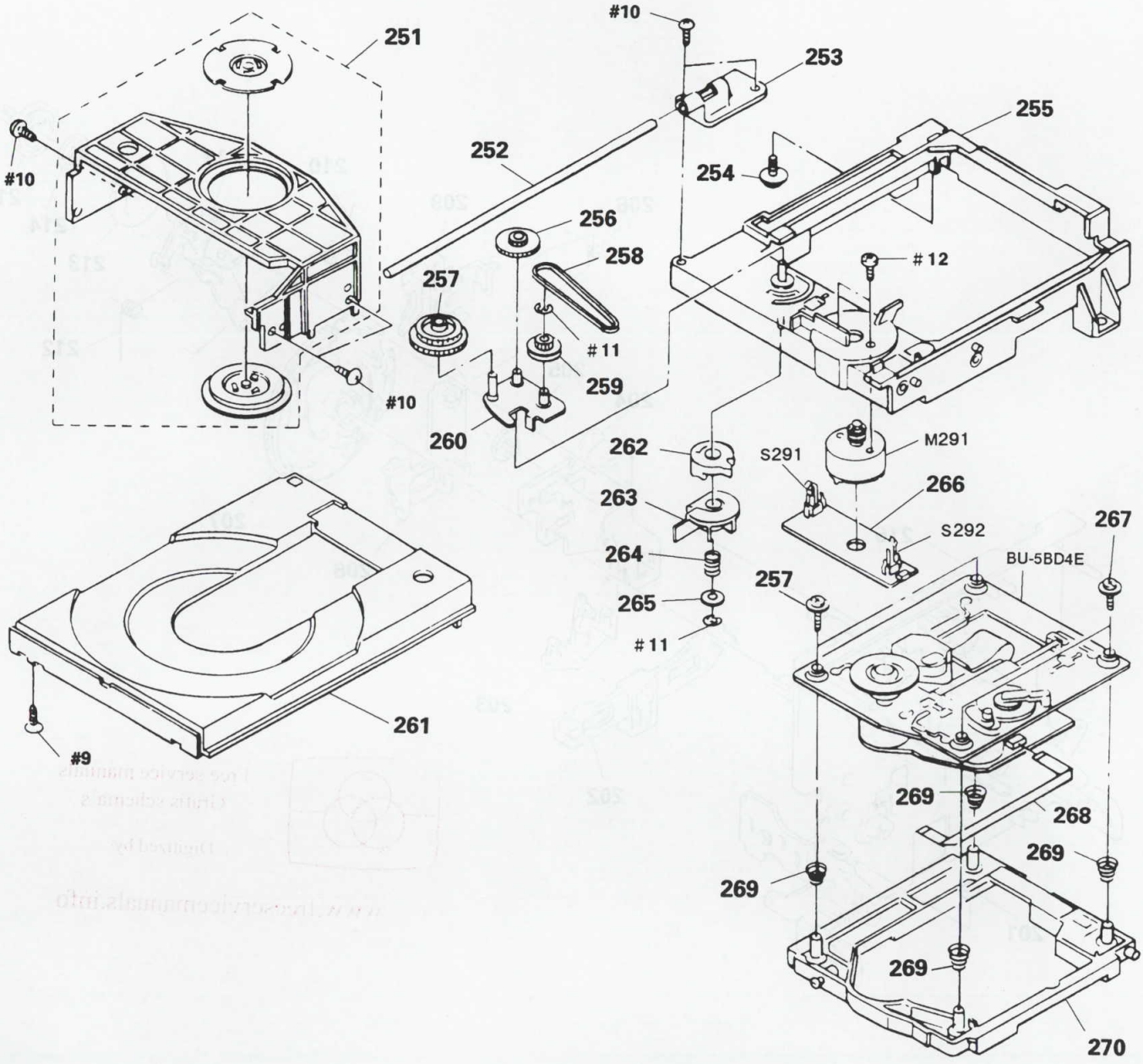

Ref. No.	Part No.	Description	Remarks
251	A-4604-752-A	HOLDER (MG) ASSY	
252	4-929-764-01	SHAFT (TABLE GUIDE)	
253	4-944-006-01	BEARING	
* 254	4-917-583-21	BRACKET, YOKE	
255	X-4941-462-1	CHASSIS (MD) ASSY	
256	4-927-628-01	GEAR (C)	
257	4-927-620-01	GEAR (P)	
258	4-927-649-01	BELT	
259	4-929-724-01	PULLEY (B)	
260	X-4929-703-1	ARM ASSY, SWING	
261	4-944-012-01	TABLE, DISC	
262	4-929-727-01	CAM (A)	
263	4-929-729-01	CAM (B)	
264	3-659-338-00	SPRING, COMPRESSION	
265	4-927-654-01	WASHER (LIMITER)	
* 266	1-638-308-11	LOADING BOARD	
267	4-933-134-01	SCREW (+PTPWH M2.6X6)	
268	1-590-530-11	WIRE (FLAT TYPE) (12 CORE)	
269	4-917-541-01	SPRING (B)	
270	4-929-747-01	HOLDER (BU)	
M291	A-4608-362-A	MOTOR (L) ASSY (LOADING)	
S291	1-571-924-11	SWITCH, LEAF (LOAD OUT)	
S292	1-571-924-11	SWITCH, LEAF (LOAD IN)	

Global electronic heritage manuals

www.freeservicemanuals.info

4-7. CD MECHANISM DECK SECTION-2

(BU-5BD4E)

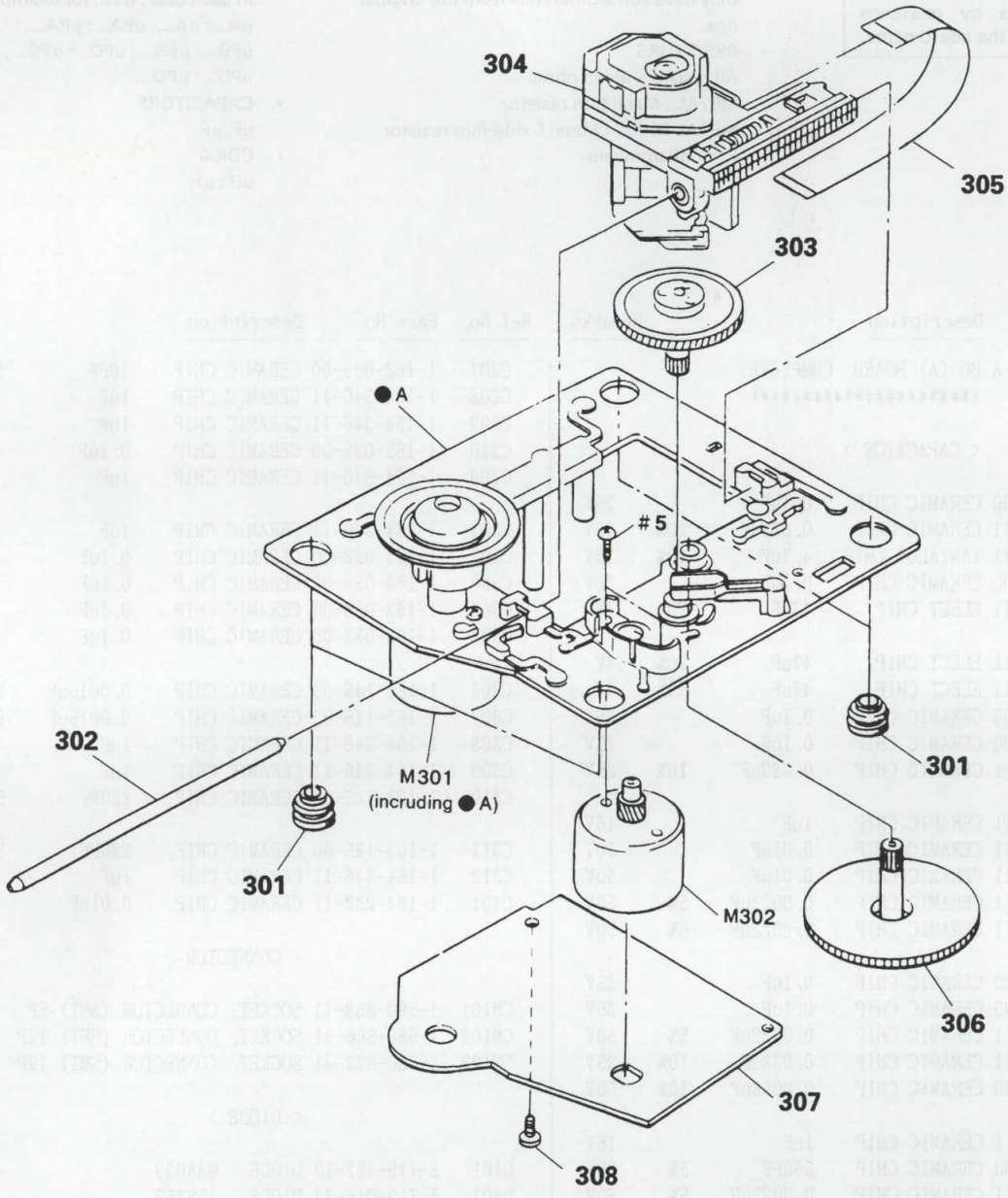

The components identified by mark ⚠ or dotted line with mark ⚠ are critical for safety.
Replace only with part number specified.

Ref. No.	Part No.	Description	Remarks
301	4-933-126-01	INSULATOR (A)	
302	4-917-565-01	SHAFT, SLED	
303	4-917-567-01	GEAR (M)	
⚠304	8-848-144-11	OPTICAL PICK-UP BLOCK KSS-240A	
305	1-575-001-11	WIRE (FLAT TYPE) (12 CORE)	
306	4-917-564-01	GEAR (P), FLATNESS	
* 307	A-4649-541-A	BD BOARD, COMPLETE	
308	4-951-620-01	SCREW (2.6X8), +BTP	
M301	X-4917-523-3	MOTOR ASSY (SPINDLE)	
M302	X-4917-504-1	MOTOR ASSY (SLED)	

Global electronic heritage manuals

www.freeservicemanuals.info

SECTION 5
ELECTRICAL PARTS LIST

BD

NOTE:

The components identified by mark ⚠ or dotted line with mark ⚠ are critical for safety.
Replace only with part number specified.

When indicating parts by reference number, please include the board name.

- EE : East European
- G : German
- IT : Italian
- EA : Saudi Arabia
- AUS : Australian
- JE : Tourist

- Due to standardization, replacements in the parts list may be different from the parts specified in the diagrams or the components used on the set.
- -XX, -X mean standardized parts, so they may have some difference from the original one.
- RESISTORS
  All resistors are in ohms
  METAL : Metal-film resistor
  METAL OXIDE : Metal Oxide-film resistor
  F : nonflammable

- Items marked "*" are not stocked since they are seldom required for routine service. Some delay should be anticipated when ordering these items.
- SEMICONDUCTORS
  In each case, u : μ, for example :
  uA...: μA..., uPA...: μPA...,
  uPB...: μPB..., uPC...: μPC...,
  uPD...: μPD...
- CAPACITORS
  uF : μF
- COILS
  uH : μH

Ref.No.	Part No.	Description		Remarks
*	A-4649-541-A	BD (A) BOARD, COMPLETE		
		**********		
		< CAPACITOR >		
C101	1-163-038-00	CERAMIC CHIP 0.1uF		25V
C102	1-163-989-11	CERAMIC CHIP 0.033uF	10%	25V
C103	1-135-155-21	TANTALUM CHIP 4.7uF	10%	16V
C104	1-163-038-00	CERAMIC CHIP 0.1uF		25V
C105	1-126-607-11	ELECT CHIP 47uF	20%	4V
C106	1-126-607-11	ELECT CHIP 47uF	20%	4V
C107	1-126-607-11	ELECT CHIP 47uF	20%	4V
C108	1-163-038-00	CERAMIC CHIP 0.1uF		25V
C109	1-163-038-00	CERAMIC CHIP 0.1uF		25V
C110	1-163-989-11	CERAMIC CHIP 0.033uF	10%	25V
C111	1-164-346-11	CERAMIC CHIP 1uF		16V
C112	1-164-232-11	CERAMIC CHIP 0.01uF		50V
C113	1-164-232-11	CERAMIC CHIP 0.01uF		50V
C114	1-164-695-11	CERAMIC CHIP 0.0022uF	5%	50V
C115	1-164-695-11	CERAMIC CHIP 0.0022uF	5%	50V
C117	1-163-038-00	CERAMIC CHIP 0.1uF		25V
C118	1-163-038-00	CERAMIC CHIP 0.1uF		25V
C119	1-164-695-11	CERAMIC CHIP 0.0022uF	5%	50V
C120	1-163-989-11	CERAMIC CHIP 0.033uF	10%	25V
C151	1-163-019-00	CERAMIC CHIP 0.0068uF	10%	50V
C152	1-164-346-11	CERAMIC CHIP 1uF		16V
C153	1-163-135-00	CERAMIC CHIP 560PF	5%	50V
C154	1-164-695-11	CERAMIC CHIP 0.0022uF	5%	50V
C155	1-163-023-00	CERAMIC CHIP 0.015uF	5%	50V
C171	1-163-038-00	CERAMIC CHIP 0.1uF		25V
C172	1-163-038-00	CERAMIC CHIP 0.1uF		25V
C173	1-163-038-00	CERAMIC CHIP 0.1uF		25V
C174	1-163-038-00	CERAMIC CHIP 0.1uF		25V
C201	1-163-809-11	CERAMIC CHIP 0.047uF	10%	25V
C202	1-163-145-00	CERAMIC CHIP 0.0015uF	5%	50V
C203	1-164-232-11	CERAMIC CHIP 0.01uF		50V
C204	1-164-005-11	CERAMIC CHIP 0.47uF		25V
C205	1-164-346-11	CERAMIC CHIP 1uF		16V
C206	1-163-093-00	CERAMIC CHIP 10PF	5%	50V
C207	1-163-093-00	CERAMIC CHIP 10PF	5%	50V
C208	1-164-346-11	CERAMIC CHIP 1uF		16V
C209	1-164-346-11	CERAMIC CHIP 1uF		16V
C210	1-163-038-00	CERAMIC CHIP 0.1uF		25V
C299	1-164-346-11	CERAMIC CHIP 1uF		16V
C301	1-164-346-11	CERAMIC CHIP 1uF		16V
C302	1-163-038-00	CERAMIC CHIP 0.1uF		25V
C303	1-163-038-00	CERAMIC CHIP 0.1uF		25V
C304	1-163-038-00	CERAMIC CHIP 0.1uF		25V
C305	1-163-038-00	CERAMIC CHIP 0.1uF		25V
C306	1-163-145-00	CERAMIC CHIP 0.0015uF	5%	50V
C307	1-163-145-00	CERAMIC CHIP 0.0015uF	5%	50V
C308	1-164-346-11	CERAMIC CHIP 1uF		16V
C309	1-164-346-11	CERAMIC CHIP 1uF		16V
C310	1-163-125-00	CERAMIC CHIP 220PF	5%	50V
C311	1-163-125-00	CERAMIC CHIP 220PF	5%	50V
C312	1-164-346-11	CERAMIC CHIP 1uF		16V
C401	1-164-232-11	CERAMIC CHIP 0.01uF		50V
		< CONNECTOR >		
CN101	1-580-858-11	SOCKET, CONNECTOR (SMT) 5P		
CN102	1-580-866-11	SOCKET, CONNECTOR (SMT) 12P		
CN103	1-580-872-41	SOCKET, CONNECTOR (SMT) 19P		
		< DIODE >		
D101	8-719-422-12	DIODE MA8039		
D201	8-719-016-74	DIODE 1SS352		
		< IC >		
IC101	8-752-053-73	IC CXA1372AQ		
IC102	8-759-823-48	IC LA6525M		
IC103	8-759-636-20	IC M54641FP		
IC201	8-752-352-93	IC CXD2500BQ		
IC202	8-759-059-86	IC uPD75116GF-F21-3BE		
IC203	8-759-098-27	IC MSM6538-01GS-VKR1		
IC301	8-759-155-52	IC PCM67U-B		
IC302	8-759-996-43	IC RC4558PS		

Global electronic heritage manuals

www.freeservicemanuals.info

BD DISPLAY

Ref.No.	Part No.	Description				Remarks
		< JUMPER RESISTOR >				
J201	1-216-296-00	METAL CHIP	0	5%	1/8W	
J203	1-216-296-00	METAL CHIP	0	5%	1/8W	
J205	1-216-295-00	METAL CHIP	0	5%	1/10W	
J206	1-216-296-00	METAL CHIP	0	5%	1/8W	
J207	1-216-296-00	METAL CHIP	0	5%	1/8W	
J208	1-216-295-00	METAL CHIP	0	5%	1/10W	
J209	1-216-296-00	METAL CHIP	0	5%	1/8W	
J210	1-216-296-00	METAL CHIP	0	5%	1/8W	
J211	1-216-296-00	METAL CHIP	0	5%	1/8W	
J212	1-216-296-00	METAL CHIP	0	5%	1/8W	
J215	1-216-295-00	METAL CHIP	0	5%	1/10W	
		< TRANSISTOR >				
Q101	8-729-805-45	TRANSISTOR	2SC3395			
Q201	8-729-602-21	TRANSISTOR	2SC4154-F			
		< RESISTOR >				
R101	1-216-097-00	METAL CHIP	100K	5%	1/10W	
R102	1-216-097-00	METAL CHIP	100K	5%	1/10W	
R103	1-216-091-00	METAL CHIP	56K	5%	1/10W	
R104	1-216-099-00	METAL CHIP	120K	5%	1/10W	
R105	1-216-069-00	METAL CHIP	6.8K	5%	1/10W	
R106	1-216-061-00	METAL CHIP	3.3K	5%	1/10W	
R107	1-216-114-00	METAL GLAZE	510K	5%	1/10W	
R108	1-216-105-00	METAL CHIP	220K	5%	1/10W	
R109	1-216-061-00	METAL CHIP	3.3K	5%	1/10W	
R110	1-216-049-00	METAL CHIP	1K	5%	1/10W	
R111	1-216-049-00	METAL CHIP	1K	5%	1/10W	
R112	1-216-083-00	METAL CHIP	27K	5%	1/10W	
R113	1-216-071-00	METAL CHIP	8.2K	5%	1/10W	
R114	1-216-105-00	METAL CHIP	220K	5%	1/10W	
R152	1-216-073-00	METAL CHIP	10K	5%	1/10W	
R153	1-216-085-00	METAL CHIP	33K	5%	1/10W	
R154	1-216-085-00	METAL CHIP	33K	5%	1/10W	
R155	1-216-093-00	METAL CHIP	68K	5%	1/10W	
R156	1-216-081-00	METAL CHIP	22K	5%	1/10W	
R157	1-236-427-11	NETWORK, RES	18K			
R159	1-216-079-00	METAL CHIP	18K	5%	1/10W	
R160	1-216-049-00	METAL CHIP	1K	5%	1/10W	
R171	1-216-001-00	METAL CHIP	10	5%	1/10W	
R172	1-216-001-00	METAL CHIP	10	5%	1/10W	
R173	1-216-001-00	METAL CHIP	10	5%	1/10W	
R174	1-216-001-00	METAL CHIP	10	5%	1/10W	
R201	1-216-061-00	METAL CHIP	3.3K	5%	1/10W	
R202	1-216-073-00	METAL CHIP	10K	5%	1/10W	
R203	1-216-061-00	METAL CHIP	3.3K	5%	1/10W	
R204	1-216-073-00	METAL CHIP	10K	5%	1/10W	
R205	1-216-097-00	METAL CHIP	100K	5%	1/10W	
R209	1-216-081-00	METAL CHIP	22K	5%	1/10W	
R212	1-239-039-11	RESISTOR, NETWORK (1608)	22K			
R214	1-239-039-11	RESISTOR, NETWORK (1608)	22K			
R218	1-216-065-00	METAL CHIP	4.7K	5%	1/10W	
R219	1-216-073-00	METAL CHIP	10K	5%	1/10W	
R220	1-216-001-00	METAL CHIP	10	5%	1/10W	
R222	1-236-427-11	NETWORK, RES	18K			
R223	1-216-081-00	METAL CHIP	22K	5%	1/10W	
R224	1-216-081-00	METAL CHIP	22K	5%	1/10W	
R225	1-216-081-00	METAL CHIP	22K	5%	1/10W	
R226	1-216-081-00	METAL CHIP	22K	5%	1/10W	
R230	1-216-051-00	METAL CHIP	1.2K	5%	1/10W	
R231	1-216-051-00	METAL CHIP	1.2K	5%	1/10W	
R232	1-216-041-00	METAL CHIP	470	5%	1/10W	
R233	1-216-041-00	METAL CHIP	470	5%	1/10W	
R234	1-216-051-00	METAL CHIP	1.2K	5%	1/10W	
R235	1-216-051-00	METAL CHIP	1.2K	5%	1/10W	
R236	1-236-413-11	NETWORK, RES	1.2K			
R301	1-236-413-11	NETWORK, RES	1.2K			
R303	1-216-055-00	METAL CHIP	1.8K	5%	1/10W	
R304	1-216-055-00	METAL CHIP	1.8K	5%	1/10W	
R305	1-216-097-00	METAL CHIP	100K	5%	1/10W	
R306	1-216-097-00	METAL CHIP	100K	5%	1/10W	
		< VARIABLE RESISTOR >				
RV101	1-241-395-11	RES, ADJ, METAL GLAZE	10K(TRACKING GAIN)			
RV102	1-241-395-11	RES, ADJ, METAL GLAZE	10K(FOCUS GAIN)			
		< SWITCH >				
SW101	1-572-085-11	SWITCH, LEAF (LIMIT)				
		< VIBRATOR >				
X201	1-567-908-11	VIBRATOR, CRYSTAL (16MHz)				
X202	1-579-216-11	VIBRATOR, CERAMIC (4MHz)				
**********						
*	A-4356-872-A	DISPLAY BOARD, COMPLETE (E, EA, AUS)				
*	A-4356-873-A	DISPLAY BOARD, COMPLETE (AEP, UK)				
*	A-4356-874-A	DISPLAY BOARD, COMPLETE (IT)				
*	A-4356-875-A	DISPLAY BOARD, COMPLETE (G)				
*	A-4356-876-A	DISPLAY BOARD, COMPLETE (EE)				
*	A-4360-447-A	DISPLAY BOARD, COMPLETE (JE)				
		**********				
*	4-932-810-11	CUSHION (FL)				
	4-956-613-01	HOLDER (G), FL				
		< CAPACITOR >				
C501	1-163-038-00	CERAMIC CHIP	0.1uF			25V
C502	1-163-038-00	CERAMIC CHIP	0.1uF			25V
C503	1-163-038-00	CERAMIC CHIP	0.1uF			25V

When indicating parts by reference number, please include the board name.

Global electronic heritage manuals

www.freeservicemanuals.info

DISPLAY

Ref. No.	Part No.	Description			Remarks
C504	1-163-038-00	CERAMIC CHIP	0.1uF		25V
C505	1-124-584-00	ELECT	100uF	20%	10V
C506	1-163-038-00	CERAMIC CHIP	0.1uF		25V
C507	1-126-157-11	ELECT	10uF	20%	16V
C508	1-163-038-00	CERAMIC CHIP	0.1uF		25V
C509	1-124-584-00	ELECT	100uF	20%	10V
C510	1-163-229-11	CERAMIC CHIP	12PF	5%	50V
C511	1-163-229-11	CERAMIC CHIP	12PF	5%	50V
C512	1-163-038-00	CERAMIC CHIP	0.1uF		25V
C513	1-126-162-11	ELECT	3.3uF	20%	50V
C514	1-163-038-00	CERAMIC CHIP	0.1uF		25V
C515	1-163-251-11	CERAMIC CHIP	100PF	5%	50V
C586	1-163-031-11	CERAMIC CHIP	0.01uF		50V
C587	1-126-948-11	ELECT	100uF	20%	35V
C588	1-124-229-00	ELECT	33uF	20%	10V
C589	1-163-009-11	CERAMIC CHIP	0.001uF	10%	50V
C590	1-163-031-11	CERAMIC CHIP	0.01uF		50V
C591	1-124-584-00	ELECT	100uF	20%	10V
C592	1-126-948-11	ELECT	100uF	20%	35V
C595	1-163-038-00	CERAMIC CHIP	0.1uF		25V
C596	1-163-031-11	CERAMIC CHIP	0.01uF		50V
C597	1-163-031-11	CERAMIC CHIP	0.01uF		50V
C598	1-124-584-00	ELECT	100uF	20%	10V
C599	1-124-584-00	ELECT	100uF	20%	10V
C5001	1-163-031-11	CERAMIC CHIP	0.01uF		50V
C5002	1-163-031-11	CERAMIC CHIP	0.01uF		50V
		< VIBRATOR >			
CF5001	1-577-359-21	VIBRATOR, CERAMIC (4.19MHz)			
		< CONNECTOR >			
* CN501	1-569-156-11	SOCKET, CONNECTOR 10P			
* CN502	1-573-049-11	SOCKET, CONNECTOR 11P			
* CN503	1-566-969-11	HOUSING, CONNECTOR (PC BOARD) 7P			
CN504	1-691-649-11	SOCKET, CONNECTOR 17P			
* CN505	1-565-042-11	HOUSING, CONNECTOR (PC BOARD) 5P			(E, EA, AUS, JE)
		< DIODE >			
D501	8-719-400-20	DIODE	MA152WA		
D502	8-719-400-20	DIODE	MA152WA		
D504	8-719-400-20	DIODE	MA152WA		
D506	8-719-400-20	DIODE	MA152WA		
D507	8-719-400-20	DIODE	MA152WA		
D508	8-719-400-53	DIODE	MA3062-L		
D510	8-719-301-37	LED	SEL2210S-CD (MAIN) (E, EA, AUS, JE)		
D511	8-719-301-37	LED	SEL2210S-CD (SUB) (E, EA, AUS, JE)		
D512	8-719-301-37	LED	SEL2210S-CD (KARAOKE PON) (E, EA, AUS, JE)		
D514	8-719-301-39	LED	SEL2210S-D (DIRECT)		
D515	8-719-301-37	LED	SEL2210S-CD (HIGH)		
D516	8-719-301-37	LED	SEL2210S-CD (NORMAL)		
D517	8-719-301-39	LED	SEL2210S-D (S-SUR)		
D520	8-719-400-20	DIODE	MA152WA		
D590	8-719-400-46	DIODE	MA3056-L		
D591	8-719-400-46	DIODE	MA3056-L		
		< FLUORESCENT INDICATOR >			
FL501	1-517-122-11	INDICATOR TUBE, FLUORESCENT			
FL5002	1-517-124-11	INDICATOR TUBE, FLUORESCENT			
		< IC >			
IC501	8-759-088-86	IC	uPD78042GF-020-3B9		
IC502	8-759-500-31	IC	X24C01P		
IC503	8-759-520-90	IC	PST572E		
IC504	8-749-923-80	IC	GP1U90XB		
IC505	8-759-094-11	IC	SN755723FT		
IC507	8-759-516-41	IC	CD4052BCM		
IC508	8-759-991-11	IC	XR1091DCP		
		< JUMPER RESISTOR >			
JW501	1-216-295-00	METAL CHIP	0	5%	1/10W (AEP, UK, EE, G, IT)
JW502	1-216-295-00	METAL CHIP	0	5%	1/10W (E, EA, AUS, JE)
JW504	1-216-295-00	METAL CHIP	0	5%	1/10W
JW505	1-216-295-00	METAL CHIP	0	5%	1/10W
JW506	1-216-296-00	METAL CHIP	0	5%	1/8W
JW507	1-216-295-00	METAL CHIP	0	5%	1/10W
JW508	1-216-295-00	METAL CHIP	0	5%	1/10W
JW509	1-216-295-00	METAL CHIP	0	5%	1/10W
JW510	1-216-295-00	METAL CHIP	0	5%	1/10W
JW511	1-216-295-00	METAL CHIP	0	5%	1/10W
JW512	1-216-296-00	METAL CHIP	0	5%	1/8W
JW513	1-216-296-00	METAL CHIP	0	5%	1/8W
JW514	1-216-296-00	METAL CHIP	0	5%	1/8W
JW516	1-216-296-00	METAL CHIP	0	5%	1/8W
JW517	1-216-295-00	METAL CHIP	0	5%	1/10W
JW518	1-216-296-00	METAL CHIP	0	5%	1/8W
JW519	1-216-296-00	METAL CHIP	0	5%	1/8W
JW521	1-216-296-00	METAL CHIP	0	5%	1/8W
JW522	1-216-296-00	METAL CHIP	0	5%	1/8W
JW523	1-216-296-00	METAL CHIP	0	5%	1/8W (E, EA, AUS, JE)
JW524	1-216-296-00	METAL CHIP	0	5%	1/8W
JW527	1-216-296-00	METAL CHIP	0	5%	1/8W
JW528	1-216-296-00	METAL CHIP	0	5%	1/8W
JW529	1-216-296-00	METAL CHIP	0	5%	1/8W
JW530	1-216-295-00	METAL CHIP	0	5%	1/10W
JW531	1-216-296-00	METAL CHIP	0	5%	1/8W
JW533	1-216-296-00	METAL CHIP	0	5%	1/8W
JW534	1-216-296-00	METAL CHIP	0	5%	1/8W

When indicating parts by reference number, please include the board name.

Global electronic heritage manuals

www.freeservicemanuals.info

DISPLAY

Ref. No.	Part No.	Description				Remarks
JW535	1-216-296-00	METAL CHIP	0	5%	1/8W	
JW536	1-216-296-00	METAL CHIP	0	5%	1/8W	
JW537	1-216-296-00	METAL CHIP	0	5%	1/8W	
JW538	1-216-296-00	METAL CHIP	0	5%	1/8W	
JW539	1-216-296-00	METAL CHIP	0	5%	1/8W	
JW540	1-216-296-00	METAL CHIP	0	5%	1/8W	
JW541	1-216-296-00	METAL CHIP	0	5%	1/8W	
JW542	1-216-296-00	METAL CHIP	0	5%	1/8W	
JW543	1-216-296-00	METAL CHIP	0	5%	1/8W	
JW544	1-216-296-00	METAL CHIP	0	5%	1/8W	
JW545	1-216-296-00	METAL CHIP	0	5%	1/8W	
JW546	1-216-296-00	METAL CHIP	0	5%	1/8W	
JW547	1-216-296-00	METAL CHIP	0	5%	1/8W	
JW548	1-216-296-00	METAL CHIP	0	5%	1/8W	
JW564	1-216-296-00	METAL CHIP	0	5%	1/8W	
JW565	1-216-296-00	METAL CHIP	0	5%	1/8W	
JW566	1-216-296-00	METAL CHIP	0	5%	1/8W	
JW567	1-216-296-00	METAL CHIP	0	5%	1/8W	
JW571	1-216-296-00	METAL CHIP	0	5%	1/8W	
JW575	1-216-296-00	METAL CHIP	0	5%	1/8W	
JW596	1-216-296-00	METAL CHIP	0	5%	1/8W	
JW631	1-216-296-00	METAL CHIP	0	5%	1/8W	
JW638	1-216-295-00	METAL CHIP	0	5%	1/10W	
JW641	1-216-296-00	METAL CHIP	0	5%	1/8W	
JW643	1-216-296-00	METAL CHIP	0	5%	1/8W	(E, EA, AUS, JE)
		< TRANSISTOR >				
Q501	8-729-620-05	TRANSISTOR	2SC2603-EF			
Q502	8-729-422-57	TRANSISTOR	UN4111			
Q503	8-729-900-80	TRANSISTOR	DTC114ES			
Q507	8-729-620-05	TRANSISTOR	2SC2603-EF			
		< RESISTOR >				
R501	1-216-053-00	METAL CHIP	1.5K	5%	1/10W	
R502	1-216-025-00	METAL CHIP	100	5%	1/10W	
R503	1-216-027-00	METAL CHIP	120	5%	1/10W	
R504	1-216-027-00	METAL CHIP	120	5%	1/10W	
R505	1-216-029-00	METAL CHIP	150	5%	1/10W	
R506	1-216-031-00	METAL CHIP	180	5%	1/10W	
R507	1-216-033-00	METAL CHIP	220	5%	1/10W	
R508	1-216-035-00	METAL CHIP	270	5%	1/10W	
R509	1-216-037-00	METAL CHIP	330	5%	1/10W	
R510	1-216-041-00	METAL CHIP	470	5%	1/10W	
R511	1-216-043-00	METAL CHIP	560	5%	1/10W	
R512	1-216-053-00	METAL CHIP	1.5K	5%	1/10W	
R513	1-216-025-00	METAL CHIP	100	5%	1/10W	
R514	1-216-027-00	METAL CHIP	120	5%	1/10W	
R515	1-216-027-00	METAL CHIP	120	5%	1/10W	
R516	1-216-029-00	METAL CHIP	150	5%	1/10W	
R517	1-216-031-00	METAL CHIP	180	5%	1/10W	
R518	1-216-033-00	METAL CHIP	220	5%	1/10W	
R519	1-216-035-00	METAL CHIP	270	5%	1/10W	
R520	1-216-037-00	METAL CHIP	330	5%	1/10W	
R521	1-216-041-00	METAL CHIP	470	5%	1/10W	
R522	1-216-043-00	METAL CHIP	560	5%	1/10W	
R523	1-216-047-00	METAL CHIP	820	5%	1/10W	
R524	1-249-418-11	CARBON	1.2K	5%	1/4W	
R525	1-216-057-00	METAL CHIP	2.2K	5%	1/10W	
R529	1-216-073-00	METAL CHIP	10K	5%	1/10W	
R530	1-216-073-00	METAL CHIP	10K	5%	1/10W	
R531	1-216-073-00	METAL CHIP	10K	5%	1/10W	
R532	1-216-073-00	METAL CHIP	10K	5%	1/10W	
R533	1-216-059-00	METAL CHIP	2.7K	5%	1/10W	
R534	1-216-059-00	METAL CHIP	2.7K	5%	1/10W	
R535	1-216-049-00	METAL CHIP	1K	5%	1/10W	
R536	1-216-053-00	METAL CHIP	1.5K	5%	1/10W	
R537	1-216-061-00	METAL CHIP	3.3K	5%	1/10W	
R538	1-216-049-00	METAL CHIP	1K	5%	1/10W	
R539	1-216-049-00	METAL CHIP	1K	5%	1/10W	
R540	1-216-049-00	METAL CHIP	1K	5%	1/10W	
R541	1-216-049-00	METAL CHIP	1K	5%	1/10W	
R542	1-216-049-00	METAL CHIP	1K	5%	1/10W	
R543	1-216-049-00	METAL CHIP	1K	5%	1/10W	
R544	1-216-049-00	METAL CHIP	1K	5%	1/10W	
R545	1-216-049-00	METAL CHIP	1K	5%	1/10W	
R546	1-216-049-00	METAL CHIP	1K	5%	1/10W	
R547	1-216-049-00	METAL CHIP	1K	5%	1/10W	
R548	1-216-049-00	METAL CHIP	1K	5%	1/10W	
R549	1-216-049-00	METAL CHIP	1K	5%	1/10W	
R550	1-216-089-00	METAL CHIP	47K	5%	1/10W	
R551	1-216-089-00	METAL CHIP	47K	5%	1/10W	
R552	1-216-089-00	METAL CHIP	47K	5%	1/10W	
R554	1-216-089-00	METAL CHIP	47K	5%	1/10W	
R555	1-216-089-00	METAL CHIP	47K	5%	1/10W	
R556	1-216-089-00	METAL CHIP	47K	5%	1/10W	
R557	1-216-089-00	METAL CHIP	47K	5%	1/10W	
R558	1-216-089-00	METAL CHIP	47K	5%	1/10W	
R559	1-216-089-00	METAL CHIP	47K	5%	1/10W	
R560	1-216-089-00	METAL CHIP	47K	5%	1/10W	
R561	1-216-089-00	METAL CHIP	47K	5%	1/10W	
R562	1-216-089-00	METAL CHIP	47K	5%	1/10W	
R563	1-216-089-00	METAL CHIP	47K	5%	1/10W	
R564	1-216-089-00	METAL CHIP	47K	5%	1/10W	
R565	1-216-089-00	METAL CHIP	47K	5%	1/10W	
R566	1-216-049-00	METAL CHIP	1K	5%	1/10W	
R567	1-216-073-00	METAL CHIP	10K	5%	1/10W	
R568	1-216-065-00	METAL CHIP	4.7K	5%	1/10W	
R569	1-216-073-00	METAL CHIP	10K	5%	1/10W	
R570	1-216-038-00	METAL CHIP	360	5%	1/10W	(E, EA, AUS, JE)
R571	1-216-097-00	METAL CHIP	100K	5%	1/10W	

When indicating parts by reference number, please include the board name.

Global electronic heritage manuals

www.freeservicemanuals.info

DISPLAY LOADING MAIN

Ref.No.	Part No.	Description			Remarks
R572	1-216-030-00	METAL CHIP	160	5%	1/10W
R573	1-216-047-00	METAL CHIP	820	5%	1/10W
R574	1-216-049-00	METAL CHIP	1K	5%	1/10W
R575	1-216-049-00	METAL CHIP	1K	5%	1/10W
R577	1-216-073-00	METAL CHIP	10K	5%	1/10W
R580	1-216-047-00	METAL CHIP	820	5%	1/10W
R581	1-216-051-00	METAL CHIP	1.2K	5%	1/10W
R582	1-216-057-00	METAL CHIP	2.2K	5%	1/10W
R583	1-216-063-00	METAL CHIP	3.9K	5%	1/10W
R584	1-216-073-00	METAL CHIP	10K	5%	1/10W
R585	1-216-073-00	METAL CHIP	10K	5%	1/10W
R586	1-216-063-00	METAL CHIP	3.9K	5%	1/10W
R587	1-216-075-00	METAL CHIP	12K	5%	1/10W
R588	1-216-089-00	METAL CHIP	47K	5%	1/10W
R589	1-216-089-00	METAL CHIP	47K	5%	1/10W
R590	1-216-073-00	METAL CHIP	10K	5%	1/10W
R591	1-216-017-00	METAL CHIP	47	5%	1/10W
R592	1-216-017-00	METAL CHIP	47	5%	1/10W
R593	1-216-053-00	METAL CHIP	1.5K	5%	1/10W
R595	1-216-065-00	METAL CHIP	4.7K	5%	1/10W
R596	1-216-025-00	METAL CHIP	100	5%	1/10W
R597	1-216-030-00	METAL CHIP	160	5%	1/10W
R5001	1-216-295-00	METAL CHIP	0	5%	1/10W(AEP, UK)
R5001	1-216-073-00	METAL CHIP	10K	5%	1/10W (JE)
R5001	1-216-067-00	METAL CHIP	5.6K	5%	1/10W (EE)
R5001	1-216-057-00	METAL CHIP	2.2K	5%	1/10W(E, EA, AUS)
R5001	1-216-041-00	METAL CHIP	470	5%	1/10W (G)
R5001	1-216-050-00	METAL GLAZE	1.1K	5%	1/10W (IT)
		< VARIABLE RESISTOR >			
RV501	1-223-300-11	RES, VAR, SLIDE 50K (ECHO) (E, EA, AUS, JE)			
RV502	1-223-300-11	RES, VAR, SLIDE 50K (MIC LEVEL) (E, EA, AUS, JE)			
		< SWITCH >			
S501	1-572-184-11	SWITCH, KEYBOARD (CLOCK DISPLAY)			
S502	1-572-184-11	SWITCH, KEYBOARD (TIMER CONT)			
S503	1-572-184-11	SWITCH, KEYBOARD (SLEEP)			
S504	1-572-184-11	SWITCH, KEYBOARD (MEMORY)			
S505	1-572-184-11	SWITCH, KEYBOARD (AUTO)			
S506	1-572-184-11	SWITCH, KEYBOARD (FM MODE)			
S507	1-572-184-11	SWITCH, KEYBOARD (TUNING +)			
S508	1-572-184-11	SWITCH, KEYBOARD (TUNING -)			
S509	1-572-184-11	SWITCH, KEYBOARD (BAND)			
S510	1-572-184-11	SWITCH, KEYBOARD (PRESET/TIMER +)			
S511	1-572-184-11	SWITCH, KEYBOARD (PRESET/TIMER -)			
S512	1-572-184-11	SWITCH, KEYBOARD (POWER)			
S513	1-572-184-11	SWITCH, KEYBOARD (TIMER SET)			
S514	1-572-184-11	SWITCH, KEYBOARD (DBFB)			
S515	1-572-184-11	SWITCH, KEYBOARD (TAPE)			

Ref.No.	Part No.	Description	Remarks
S516	1-572-184-11	SWITCH, KEYBOARD (CD)	
S517	1-572-184-11	SWITCH, KEYBOARD (TUNER)	
S518	1-572-184-11	SWITCH, KEYBOARD (PHONO:AEP, UK, EE, G, IT., VIDEO/AUX:E, EA, AUS, JE)	
S519	1-572-184-11	SWITCH, KEYBOARD (ROCK:AEP, UK, EE, G, IT., STEREO:E, EA, AUS, JE)	
S520	1-572-184-11	SWITCH, KEYBOARD (POPS:AEP, UK, EE, G, IT., MAIN:E, EA, AUS, JE)	
S521	1-572-184-11	SWITCH, KEYBOARD (JAZZ:AEP, UK, EE, G, IT., SUB:E, EA, AUS, JE)	
S522	1-572-184-11	SWITCH, KEYBOARD (HALL:AEP, UK, EE, G, IT., KARAOKE PON:E, EA, AUS, JE)	
S523	1-572-184-11	SWITCH, KEYBOARD (BGM:AEP, UK, EE, G, IT., PRESET:E, EA, AUS, JE)	
S524	1-572-184-11	SWITCH, KEYBOARD (DIRECT)	
S525	1-572-184-11	SWITCH, KEYBOARD (S-SUR)	
S580	1-572-184-11	SWITCH, KEYBOARD (CURSOR CONTROL ▲)	
S581	1-572-184-11	SWITCH, KEYBOARD (CURSOR CONTROL ▼)	
S582	1-572-184-11	SWITCH, KEYBOARD (MEMORY)	
S583	1-572-184-11	SWITCH, KEYBOARD (FILE)	
S584	1-572-184-11	SWITCH, KEYBOARD (CURSOR CONTROL ▶)	
S585	1-572-184-11	SWITCH, KEYBOARD (CURSOR CONTROL ◀)	
		< VIBRATOR >	
X5001	1-527-997-21	VIBRATOR, CRYSTAL (32.768kHz)	
**********			
*	1-638-308-11	LOADING BOARD	
		**********	
		< CONNECTOR >	
CN291	1-580-918-11	HOUSING, CONNECTOR 5P	
		< SWITCH >	
S291	1-571-924-11	SWITCH, LEAF (LOAD OUT)	
S292	1-571-924-11	SWITCH, LEAF (LOAD IN)	
**********			
*	A-4356-859-A	MAIN BOARD, COMPLETE (E, EA, AUS)	
*	A-4356-860-A	MAIN BOARD, COMPLETE (H71:AEP)	
*	A-4356-861-A	MAIN BOARD, COMPLETE (G, IT)	
*	A-4356-862-A	MAIN BOARD, COMPLETE (EE)	
*	A-4356-863-A	MAIN BOARD, COMPLETE (JE)	
*	A-4356-885-A	MAIN BOARD, COMPLETE (H71M)	
		**********	
		< CAPACITOR >	
C1	1-162-195-31	CERAMIC 4.7PF 10% 50V (H71)	
C2	1-124-907-11	ELECT 10uF 20% 50V	
C3	1-161-379-00	CERAMIC 0.01uF 20% 25V	
C4	1-162-294-31	CERAMIC 0.001uF 10% 50V	
C5	1-101-005-00	CERAMIC 22000PF 50V(EXCEPT G, IT)	
C6	1-162-195-31	CERAMIC 4.7PF 10% 50V(E, EA, AUS, JE)	

When indicating parts by reference number, please include the board name.

Global electronic heritage manuals

www.freeservicemanuals.info

MAIN

Ref.No.	Part No.	Description	Remarks
C7	1-136-162-00	FILM 0.056uF 5%	50V(E, EA, AUS, JE)
C8	1-164-159-11	CERAMIC 0.1uF	50V(E, EA, AUS, JE)
C9	1-102-120-00	CERAMIC 0.0018uF 10%	50V(AEP, UK, EE)
C10	1-161-374-11	CERAMIC 0.0015uF 20%	50V(AEP, UK, EE)
C11	1-161-494-00	CERAMIC 0.022uF	25V(EXCEPT G, IT)
C12	1-164-097-11	CERAMIC 0.022uF	50V
C13	1-102-945-00	CERAMIC 8.0PF +-0.5PF	50V
C14	1-124-463-00	ELECT 0.1uF 20%	50V
C15	1-164-095-11	CERAMIC 0.01uF 10%	16V
C16	1-124-925-11	ELECT 2.2uF 20%	100V
C17	1-164-097-11	CERAMIC 0.022uF	50V(AEP, UK, EE)
C18	1-164-097-11	CERAMIC 0.022uF	50V(AEP, UK, EE)
C19	1-136-173-00	FILM 0.47uF 5%	50V(AEP, UK, EE)
C20	1-124-477-11	ELECT 47uF 20%	25V
C21	1-161-379-00	CERAMIC 0.01uF 20%	25V
C22	1-124-907-11	ELECT 10uF 20%	50V
C23	1-164-095-11	CERAMIC 0.01uF 10%	16V
C24	1-161-379-00	CERAMIC 0.01uF 20%	25V
C25	1-164-052-11	CERAMIC 18PF 5%	50V
C26	1-164-052-11	CERAMIC 18PF 5%	50V
C27	1-161-379-00	CERAMIC 0.01uF 20%	25V
C28	1-161-379-00	CERAMIC 0.01uF 20%	25V
C29	1-161-379-00	CERAMIC 0.01uF 20%	25V
C30	1-162-207-31	CERAMIC 22PF 5%	50V
C31	1-161-379-00	CERAMIC 0.01uF 20%	25V
C32	1-124-907-11	ELECT 10uF 20%	50V
C33	1-161-379-00	CERAMIC 0.01uF 20%	25V
C34	1-161-379-00	CERAMIC 0.01uF 20%	25V
C35	1-161-379-00	CERAMIC 0.01uF 20%	25V
C36	1-161-379-00	CERAMIC 0.01uF 20%	25V
C37	1-124-925-11	ELECT 2.2uF 20%	100V
C38	1-124-903-11	ELECT 1uF 20%	50V
C39	1-124-903-11	ELECT 1uF 20%	50V
C40	1-161-379-00	CERAMIC 0.01uF 20%	25V
C41	1-123-382-00	ELECT 3.3uF 20%	100V
C42	1-124-907-11	ELECT 10uF 20%	50V
C43	1-161-379-00	CERAMIC 0.01uF 20%	25V
C44	1-161-377-00	CERAMIC 0.0047uF 30%	16V
C45	1-162-294-31	CERAMIC 0.001uF 10%	50V(EXCEPT G, IT)
C45	1-162-291-31	CERAMIC 560PF 10%	50V(G, IT)
C46	1-162-282-31	CERAMIC 100PF 10%	50V(G, IT)
C47	1-124-903-11	ELECT 1uF 20%	50V
C48	1-136-157-00	FILM 0.022uF 5%	50V
C49	1-136-157-00	FILM 0.022uF 5%	50V
C50	1-124-903-11	ELECT 1uF 20%	50V
C51	1-124-903-11	ELECT 1uF 20%	50V
C52	1-124-903-11	ELECT 1uF 20%	50V
C53	1-124-903-11	ELECT 1uF 20%	50V
C54	1-161-375-00	CERAMIC 0.0022uF 20%	50V
C55	1-161-375-00	CERAMIC 0.0022uF 20%	50V
C56	1-124-477-11	ELECT 47uF 20%	25V
C57	1-126-176-11	ELECT 220uF 20%	10V
C58	1-164-097-11	CERAMIC 0.022uF	50V
C59	1-162-294-31	CERAMIC 0.001uF 10%	50V
C60	1-162-294-31	CERAMIC 0.001uF 10%	50V
C61	1-130-478-00	MYLAR 0.0039uF 5%	50V
C62	1-130-478-00	MYLAR 0.0039uF 5%	50V
C63	1-162-294-31	CERAMIC 0.001uF 10%	50V
C64	1-162-294-31	CERAMIC 0.001uF 10%	50V(EXCEPT G, IT)
C65	1-101-884-00	CERAMIC 56PF 5%	50V
C581	1-124-927-11	ELECT 4.7uF 20%	100V
C582	1-124-907-11	ELECT 10uF 20%	50V
C583	1-136-177-00	FILM 1uF 5%	50V
C601	1-162-286-31	CERAMIC 220PF 10%	50V
C602	1-162-286-31	CERAMIC 220PF 10%	50V
C603	1-162-282-31	CERAMIC 100PF 10%	50V(AEP, UK, EE, G, IT)
C604	1-162-282-31	CERAMIC 100PF 10%	50V(AEP, UK, EE, G, IT)
C605	1-124-902-00	ELECT 0.47uF 20%	50V(AEP, UK, EE, G, IT)
C606	1-124-902-00	ELECT 0.47uF 20%	50V(AEP, UK, EE, G, IT)
C607	1-162-282-31	CERAMIC 100PF 10%	50V(AEP, UK, EE, G, IT)
C608	1-162-282-31	CERAMIC 100PF 10%	50V(AEP, UK, EE, G, IT)
C609	1-124-927-11	ELECT 4.7uF 20%	100V(AEP, UK, EE, G, IT)
C610	1-124-927-11	ELECT 4.7uF 20%	100V(AEP, UK, EE, G, IT)
C611	1-161-374-11	CERAMIC 0.0015uF 20%	50V(AEP, UK, EE, G, IT)
C612	1-161-374-11	CERAMIC 0.0015uF 20%	50V(AEP, UK, EE, G, IT)
C613	1-102-126-00	CERAMIC 0.0056uF 10%	50V(AEP, UK, EE, G, IT)
C614	1-102-126-00	CERAMIC 0.0056uF 10%	50V(AEP, UK, EE, G, IT)
C615	1-124-925-11	ELECT 2.2uF 20%	100V(AEP, UK, EE, G, IT)
C616	1-124-925-11	ELECT 2.2uF 20%	100V(AEP, UK, EE, G, IT)
C617	1-124-477-11	ELECT 47uF 20%	25V(AEP, UK, EE, G, IT)
C618	1-124-477-11	ELECT 47uF 20%	25V(AEP, UK, EE, G, IT)
C619	1-164-159-11	CERAMIC 0.1uF	50V
C620	1-164-159-11	CERAMIC 0.1uF	50V
C621	1-164-159-11	CERAMIC 0.1uF	50V(E, EA, AUS, JE)
C622	1-164-159-11	CERAMIC 0.1uF	50V(E, EA, AUS, JE)
C623	1-124-903-11	ELECT 1uF 20%	50V(E, EA, AUS, JE)
C624	1-124-903-11	ELECT 1uF 20%	50V(E, EA, AUS, JE)
C627	1-161-494-00	CERAMIC 0.022uF	25V(E, EA, AUS, JE)
C628	1-161-494-00	CERAMIC 0.022uF	25V(E, EA, AUS, JE)
C629	1-162-282-31	CERAMIC 100PF 10%	50V
C630	1-162-282-31	CERAMIC 100PF 10%	50V
C631	1-162-207-31	CERAMIC 22PF 5%	50V
C632	1-162-207-31	CERAMIC 22PF 5%	50V
C633	1-164-159-11	CERAMIC 0.1uF	50V
C634	1-164-159-11	CERAMIC 0.1uF	50V
C635	1-161-379-00	CERAMIC 0.01uF 20%	25V(E, EA, AUS, JE)
C636	1-161-379-00	CERAMIC 0.01uF 20%	25V(E, EA, AUS, JE)
C637	1-124-477-11	ELECT 47uF 20%	25V
C638	1-124-477-11	ELECT 47uF 20%	25V
C639	1-162-282-31	CERAMIC 100PF 10%	50V

Free service manuals
Grats schemas
Digitized by
www.freeservicemanuals.info

When indicating parts by reference number, please include the board name.

Global electronic heritage manuals

www.freeservicemanuals.info

MAIN

Ref. No.	Part No.	Description			Remarks
C640	1-162-282-31	CERAMIC	100PF	10%	50V
C641	1-164-159-11	CERAMIC	0.1uF		50V
C642	1-164-159-11	CERAMIC	0.1uF		50V
C643	1-162-288-31	CERAMIC	330PF	10%	50V (G, IT)
C644	1-162-288-31	CERAMIC	330PF	10%	50V (G, IT)
C651	1-136-161-00	FILM	0.047uF	5%	50V (G, IT)
C652	1-136-161-00	FILM	0.047uF	5%	50V (G, IT)
C701	1-124-907-11	ELECT	10uF	20%	50V
C702	1-126-157-11	ELECT	10uF	20%	16V
C703	1-124-907-11	ELECT	10uF	20%	50V
C704	1-126-157-11	ELECT	10uF	20%	16V
C705	1-136-164-00	FILM	0.082uF	5%	50V
C706	1-136-164-00	FILM	0.082uF	5%	50V
C707	1-136-167-00	FILM	0.15uF	5%	50V
C708	1-136-167-00	FILM	0.15uF	5%	50V
C709	1-162-292-31	CERAMIC	680PF	10%	50V
C710	1-162-292-31	CERAMIC	680PF	10%	50V
C711	1-102-118-00	CERAMIC	0.0012uF	10%	50V
C712	1-102-118-00	CERAMIC	0.0012uF	10%	50V
C713	1-161-374-11	CERAMIC	0.0015uF	20%	50V
C714	1-161-374-11	CERAMIC	0.0015uF	20%	50V
C715	1-102-122-00	CERAMIC	0.0027uF	10%	50V
C716	1-102-122-00	CERAMIC	0.0027uF	10%	50V
C717	1-102-124-00	CERAMIC	0.0039uF	10%	50V
C718	1-102-124-00	CERAMIC	0.0039uF	10%	50V
C719	1-161-329-00	CERAMIC	0.0068uF	30%	16V
C720	1-161-329-00	CERAMIC	0.0068uF	30%	16V
C721	1-161-379-00	CERAMIC	0.01uF	20%	25V
C722	1-161-379-00	CERAMIC	0.01uF	20%	25V
C723	1-136-156-00	FILM	0.018uF	5%	50V
C724	1-136-156-00	FILM	0.018uF	5%	50V
C725	1-161-494-00	CERAMIC	0.022uF		25V
C726	1-161-494-00	CERAMIC	0.022uF		25V
C727	1-101-006-00	CERAMIC	0.047uF		50V
C728	1-101-006-00	CERAMIC	0.047uF		50V
C729	1-136-162-00	FILM	0.056uF	5%	50V
C730	1-136-162-00	FILM	0.056uF	5%	50V
C731	1-164-159-11	CERAMIC	0.1uF		50V
C732	1-164-159-11	CERAMIC	0.1uF		50V
C733	1-136-167-00	FILM	0.15uF	5%	50V
C734	1-136-167-00	FILM	0.15uF	5%	50V
C735	1-136-169-00	FILM	0.22uF	5%	50V
C736	1-136-169-00	FILM	0.22uF	5%	50V
C737	1-162-282-31	CERAMIC	100PF	10%	50V
C738	1-162-282-31	CERAMIC	100PF	10%	50V
C739	1-124-907-11	ELECT	10uF	20%	50V
C740	1-126-157-11	ELECT	10uF	20%	16V
C741	1-162-282-31	CERAMIC	100PF	10%	50V
C742	1-162-282-31	CERAMIC	100PF	10%	50V
C743	1-162-282-31	CERAMIC	100PF	10%	50V
C744	1-162-282-31	CERAMIC	100PF	10%	50V
C745	1-124-907-11	ELECT	10uF	20%	50V
C746	1-126-157-11	ELECT	10uF	20%	16V
C747	1-162-282-31	CERAMIC	100PF	10%	50V
C748	1-162-282-31	CERAMIC	100PF	10%	50V
C749	1-124-903-11	ELECT	1uF	20%	50V
C750	1-126-301-11	ELECT	1uF	20%	50V
C751	1-164-159-11	CERAMIC	0.1uF		50V
C752	1-164-159-11	CERAMIC	0.1uF		50V
C753	1-164-159-11	CERAMIC	0.1uF		50V
C755	1-124-443-00	ELECT	100uF	20%	10V
C758	1-124-443-00	ELECT	100uF	20%	10V
C759	1-124-443-00	ELECT	100uF	20%	10V
C760	1-124-443-00	ELECT	100uF	20%	10V
C761	1-124-903-11	ELECT	1uF	20%	50V
C762	1-124-903-11	ELECT	1uF	20%	50V
C763	1-124-927-11	ELECT	4.7uF	20%	100V
C764	1-124-927-11	ELECT	4.7uF	20%	100V
C766	1-124-907-11	ELECT	10uF	20%	50V
C767	1-124-903-11	ELECT	1uF	20%	50V
C768	1-124-473-11	ELECT	1000uF	20%	10V
C769	1-124-903-11	ELECT	1uF	20%	50V
C771	1-162-215-31	CERAMIC	47PF	5%	50V
C772	1-162-215-31	CERAMIC	47PF	5%	50V

< FILTER >

CF1	1-527-968-11	FILTER, CERAMIC
CF2	1-527-968-11	FILTER, CERAMIC (G, IT)
CF3	1-527-968-11	FILTER, CERAMIC

< CONNECTOR >

CN601	1-537-238-11	TERMINAL BOARD 4P (SPEAKER)
* CN602	1-564-510-11	PLUG, CONNECTOR 7P
* CN603	1-568-454-11	PIN, CONNECTOR (PC BOARD) 9P
* CN604	1-568-454-11	PIN, CONNECTOR (PC BOARD) 9P
* CN605	1-573-085-11	CONNECTOR, FPC (NON ZIF) 19P
CN606	1-695-328-21	PIN, CONNECTOR (PC BOARD) 5P (E, EA, AUS, JE)
* CN607	1-564-706-11	PIN, CONNECTOR (SMALL TYPE) 4P
* CN608	1-564-511-11	PLUG, CONNECTOR 8P
* CN609	1-564-708-11	PIN, CONNECTOR (SMALL TYPE) 6P
CN610	1-695-340-21	PIN, CONNECTOR (PC BOARD) 17P
* CN611	1-573-048-11	PLUG, CONNECTOR 11P
* CN612	1-569-155-11	PLUG, CONNECTOR 10P

< TRIMMER >

CT1	1-141-227-00	CAP, TRIMMER 20PF (E, EA, AUS, JE)
CT2	1-141-227-00	CAP, TRIMMER 20PF (E, EA, AUS, JE)

< DIODE >

D1	8-719-976-30	DIODE KV1560N (E, EA, AUS, JE)

When indicating parts by reference number, please include the board name.

Global electronic heritage manuals

www.freeservicemanuals.info

MAIN

Ref.No.	Part No.	Description	Remarks
D2	8-719-987-63	DIODE 1N4148M	
D581	8-719-987-63	DIODE 1N4148M	(E, EA, AUS, JE)
D582	8-719-987-63	DIODE 1N4148M	(E, EA, AUS, JE)
D583	8-719-987-63	DIODE 1N4148M	(E, EA, AUS, JE)
D584	8-719-987-63	DIODE 1N4148M	
D586	8-719-987-63	DIODE 1N4148M	
D588	8-719-987-63	DIODE 1N4148M	
D601	8-719-987-63	DIODE 1N4148M	
D603	8-719-987-63	DIODE 1N4148M	
D604	8-719-987-63	DIODE 1N4148M	
D605	8-719-987-63	DIODE 1N4148M	
		< FRONTEND >	
FE1	1-465-673-11	FRONT END (2 BAND)(FM)	(AEP, UK, E, EA, AUS)
FE1	1-693-216-11	FRONT END (FM)	(JE)
FE1	1-465-396-11	FRONT END (3 GANG) (FM)	(EE)
FE1	1-465-007-11	FRONT END (FM) (4 GANG)	(G, IT)
FE2	1-236-463-11	ENCAPSULATED COMPONENT(LW)	(AEP, UK, EE)
FE3	1-239-261-12	ENCAPSULATED COMPONENT(MW)	(AEP, UK, EE)
FE3	1-239-262-11	ENCAPSULATED COMPONENT(MW)	(E, EA, AUS, JE)
FE3	1-239-260-11	ENCAPSULATED COMPONENT(MW)	(G, IT)
		< FILTER >	
FL1	1-236-465-11	ENCAPSULATED COMPONENT	(G, IT)
FL2	1-239-597-11	FILTER, LOW-PASS	
FL3	1-239-597-11	FILTER, LOW-PASS	
		< IC >	
IC1	8-759-820-91	IC LC7218	
IC2	8-759-090-40	IC LA1831	
IC581	8-759-166-03	IC M50253PK	
IC601	8-759-634-51	IC M5218AP	(AEP, UK, EE, G, IT)
IC602	8-759-000-48	IC MC14052BCP	
IC603	8-759-000-48	IC MC14052BCP	(E, EA, AUS, JE)
IC604	8-759-000-48	IC MC14052BCP	(E, EA, AUS, JE)
IC605	8-759-634-51	IC M5218AP	
IC606	8-759-634-51	IC M5218AP	
IC607	8-759-155-51	IC CXA1492BQ	
IC609	8-759-821-93	IC LA5601	
		< IFT >	
IFT1	1-404-853-11	TRANSFORMER, IF (CERAMIC FILTER)	(AM IF)
		< JACK >	
J601	1-569-181-11	JACK, PIN 2P (PHONO;AEP, UK, EE, G, IT., VIDEO/AUX;E, EA, AUS, JE)	
J602	1-569-181-11	JACK, PIN 2P (SURROUND SPEAKER)	(E, EA, AUS, JE)

Ref.No.	Part No.	Description	Remarks
		< COIL >	
L1	1-408-425-00	INDUCTOR 220uH	(AEP, UK, EE)
L3	1-408-399-00	INDUCTOR 1.5uH	
* L600	1-410-858-11	INDUCTOR 0uH	(G, IT)
* L601	1-410-858-11	INDUCTOR 0uH	(G, IT)
		< TRANSISTOR >	
Q1	8-729-620-19	TRANSISTOR 2SC2724-CD	
Q2	8-729-620-19	TRANSISTOR 2SC2724-CD	(G, IT)
Q3	8-729-422-57	TRANSISTOR UN4111	
Q4	8-729-119-76	TRANSISTOR 2SA1175-HFE	(EXCEPT G, IT)
Q5	8-729-900-80	TRANSISTOR DTC114ES	(EXCEPT G, IT)
Q6	8-729-900-80	TRANSISTOR DTC114ES	(EXCEPT G, IT)
Q7	8-729-900-80	TRANSISTOR DTC114ES	(EXCEPT G, IT)
Q8	8-729-119-76	TRANSISTOR 2SA1175-HFE	(EXCEPT G, IT)
Q9	8-729-900-80	TRANSISTOR DTC114ES	(EXCEPT G, IT)
Q10	8-729-201-83	TRANSISTOR 2SC3112-A	
Q11	8-729-202-67	FET 2SK246-GR3	
Q12	8-729-201-83	TRANSISTOR 2SC3112-A	(AEP, UK, EE)
Q13	8-729-202-67	FET 2SK246-GR3	(AEP, UK, EE)
Q14	8-729-620-05	TRANSISTOR 2SC2603-EF	
Q15	8-729-620-05	TRANSISTOR 2SC2603-EF	
Q581	8-729-900-89	TRANSISTOR DTC144ES	
Q582	8-729-900-80	TRANSISTOR DTC114ES	
Q583	8-729-620-05	TRANSISTOR 2SC2603-EF	
Q601	8-729-141-30	TRANSISTOR 2SC3623A-LK	
Q602	8-729-141-30	TRANSISTOR 2SC3623A-LK	
Q603	8-729-141-30	TRANSISTOR 2SC3623A-LK	
Q604	8-729-900-63	TRANSISTOR DTA124ES	
Q751	8-729-620-05	TRANSISTOR 2SC2603-EF	
Q752	8-729-620-05	TRANSISTOR 2SC2603-EF	
		< RESISTOR >	
R1	1-249-411-11	CARBON 330 5% 1/4W	
R2	1-249-411-11	CARBON 330 5% 1/4W	
R3	1-247-891-00	CARBON 330K 5% 1/4W	
R4	1-249-411-11	CARBON 330 5% 1/4W	
R5	1-247-891-00	CARBON 330K 5% 1/4W	(G. IT)
R6	1-249-411-11	CARBON 330 5% 1/4W	(G, IT)
R7	1-249-405-11	CARBON 100 5% 1/4W	
R8	1-249-433-11	CARBON 22K 5% 1/4W	(EXCEPT G, IT)
R9	1-247-903-00	CARBON 1M 5% 1/4W	(EXCEPT G, IT)
R10	1-247-903-00	CARBON 1M 5% 1/4W	(AEP, UK, EE)
R11	1-249-425-11	CARBON 4.7K 5% 1/4W	(EXCEPT G, IT)
R12	1-249-441-11	CARBON 100K 5% 1/4W	
R13	1-249-437-11	CARBON 47K 5% 1/4W	
R16	1-249-425-11	CARBON 4.7K 5% 1/4W	(EXCEPT G, IT)
R17	1-249-425-11	CARBON 4.7K 5% 1/4W	(EXCEPT G, IT)
R18	1-249-429-11	CARBON 10K 5% 1/4W	(EXCEPT G, IT)

When indicating parts by reference number, please include the board name.

Global electronic heritage manuals

www.freeservicemanuals.info

MAIN

Ref. No.	Part No.	Description	Remarks
R19	1-249-429-11	CARBON 10K 5% 1/4W	(EXCEPT G, IT)
R20	1-249-429-11	CARBON 10K 5% 1/4W	(EXCEPT G, IT)
R21	1-249-405-11	CARBON 100 5% 1/4W	
R22	1-249-425-11	CARBON 4.7K 5% 1/4W	
R23	1-249-425-11	CARBON 4.7K 5% 1/4W	
R24	1-249-421-11	CARBON 2.2K 5% 1/4W	
R25	1-249-425-11	CARBON 4.7K 5% 1/4W	
R26	1-249-414-11	CARBON 560 5% 1/4W	
R27	1-249-417-11	CARBON 1K 5% 1/4W	
R28	1-249-410-11	CARBON 270 5% 1/4W	
R29	1-249-423-11	CARBON 3.3K 5% 1/4W	
R30	1-249-425-11	CARBON 4.7K 5% 1/4W	(AEP, UK, EE)
R31	1-249-425-11	CARBON 4.7K 5% 1/4W	(AEP, UK, EE)
R32	1-249-421-11	CARBON 2.2K 5% 1/4W	(AEP, UK, EE)
R33	1-249-433-11	CARBON 22K 5% 1/4W	(AEP, UK, EE)
R34	1-249-414-11	CARBON 560 5% 1/4W	(AEP, UK, EE)
R35	1-249-417-11	CARBON 1K 5% 1/4W	(AEP, UK, EE)
R36	1-249-410-11	CARBON 270 5% 1/4W	(AEP, UK, EE)
R37	1-249-423-11	CARBON 3.3K 5% 1/4W	(AEP, UK, EE)
R38	1-249-401-11	CARBON 47 5% 1/4W	
R39	1-249-405-11	CARBON 100 5% 1/4W	
R40	1-249-429-11	CARBON 10K 5% 1/4W	
R41	1-249-417-11	CARBON 1K 5% 1/4W	
R42	1-249-417-11	CARBON 1K 5% 1/4W	
R43	1-249-417-11	CARBON 1K 5% 1/4W	
R44	1-249-417-11	CARBON 1K 5% 1/4W	
R45	1-249-417-11	CARBON 1K 5% 1/4W	
R46	1-249-425-11	CARBON 4.7K 5% 1/4W	
R47	1-249-417-11	CARBON 1K 5% 1/4W	
R48	1-249-399-11	CARBON 33 5% 1/4W	
R50	1-247-848-11	CARBON 5.1K 5% 1/4W	
R51	1-249-412-11	CARBON 390 5% 1/4W	
R52	1-249-429-11	CARBON 10K 5% 1/4W	
R53	1-247-842-11	CARBON 3K 5% 1/4W	
R54	1-249-429-11	CARBON 10K 5% 1/4W	
R55	1-249-429-11	CARBON 10K 5% 1/4W	
R56	1-249-441-11	CARBON 100K 5% 1/4W	
R57	1-249-430-11	CARBON 12K 5% 1/4W	(EXCEPT G, IT)
R58	1-249-430-11	CARBON 12K 5% 1/4W	(G, IT)
R59	1-249-425-11	CARBON 4.7K 5% 1/4W	
R60	1-249-425-11	CARBON 4.7K 5% 1/4W	
R61	1-247-891-00	CARBON 330K 5% 1/4W	
R62	1-247-891-00	CARBON 330K 5% 1/4W	
R63	1-249-412-11	CARBON 390 5% 1/4W	
R64	1-249-412-11	CARBON 390 5% 1/4W	
R65	1-249-421-11	CARBON 2.2K 5% 1/4W	
R66	1-249-421-11	CARBON 2.2K 5% 1/4W	
R67	1-249-409-11	CARBON 220 5% 1/4W	
R68	1-249-405-11	CARBON 100 5% 1/4W	
R69	1-249-425-11	CARBON 4.7K 5% 1/4W	
R70	1-249-425-11	CARBON 4.7K 5% 1/4W	
R74	1-249-433-11	CARBON 22K 5% 1/4W	
R80	1-249-429-11	CARBON 10K 5% 1/4W	(EXCEPT G, IT)
R81	1-249-429-11	CARBON 10K 5% 1/4W	(EXCEPT G, IT)
R581	1-249-425-11	CARBON 4.7K 5% 1/4W	
R582	1-249-425-11	CARBON 4.7K 5% 1/4W	
R583	1-249-429-11	CARBON 10K 5% 1/4W	
R584	1-249-429-11	CARBON 10K 5% 1/4W	
R585	1-249-429-11	CARBON 10K 5% 1/4W	
R601	1-249-417-11	CARBON 1K 5% 1/4W	
R602	1-249-417-11	CARBON 1K 5% 1/4W	
R603	1-249-417-11	CARBON 1K 5% 1/4W	(AEP, UK, EE, G, IT)
R603	1-249-429-11	CARBON 10K 5% 1/4W	(E, EA, AUS, JE)
R604	1-249-417-11	CARBON 1K 5% 1/4W	(AEP, UK, EE, G, IT)
R604	1-249-429-11	CARBON 10K 5% 1/4W	(E, EA, AUS, JE)
R605	1-249-438-11	CARBON 56K 5% 1/4W	(AEP, UK, EE, G, IT)
R606	1-249-438-11	CARBON 56K 5% 1/4W	(AEP, UK, EE, G, IT)
R607	1-249-417-11	CARBON 1K 5% 1/4W	(AEP, UK, EE, G, IT)
R608	1-249-417-11	CARBON 1K 5% 1/4W	(AEP, UK, EE, G, IT)
R609	1-249-437-11	CARBON 47K 5% 1/4W	(AEP, UK, EE, G, IT)
R610	1-249-437-11	CARBON 47K 5% 1/4W	(AEP, UK, EE, G, IT)
R611	1-247-897-11	CARBON 560K 5% 1/4W	(AEP, UK, EE, G, IT)
R612	1-247-897-11	CARBON 560K 5% 1/4W	(AEP, UK, EE, G, IT)
R613	1-249-417-11	CARBON 1K 5% 1/4W	(AEP, UK, EE, G, IT)
R614	1-249-417-11	CARBON 1K 5% 1/4W	(AEP, UK, EE, G, IT)
R615	1-249-405-11	CARBON 100 5% 1/4W	(AEP, UK, EE, G, IT)
R616	1-249-405-11	CARBON 100 5% 1/4W	(AEP, UK, EE, G, IT)
R617	1-249-437-11	CARBON 47K 5% 1/4W	
R618	1-249-437-11	CARBON 47K 5% 1/4W	
R619	1-249-429-11	CARBON 10K 5% 1/4W	
R620	1-249-429-11	CARBON 10K 5% 1/4W	
R621	1-249-429-11	CARBON 10K 5% 1/4W	(E, EA, AUS, JE)
R622	1-249-429-11	CARBON 10K 5% 1/4W	(E, EA, AUS, JE)
R623	1-249-389-11	CARBON 4.7 5% 1/4W	(G, IT)
R623	1-247-903-00	CARBON 1M 5% 1/4W	(E, EA, AUS, JE)
R624	1-249-389-11	CARBON 4.7 5% 1/4W	(G, IT)
R624	1-247-903-00	CARBON 1M 5% 1/4W	(E, EA, AUS, JE)
R625	1-249-429-11	CARBON 10K 5% 1/4W	(E, EA, AUS, JE)
R626	1-249-429-11	CARBON 10K 5% 1/4W	(E, EA, AUS, JE)
R627	1-249-437-11	CARBON 47K 5% 1/4W	(E, EA, AUS, JE)
R628	1-249-437-11	CARBON 47K 5% 1/4W	(E, EA, AUS, JE)
R629	1-249-437-11	CARBON 47K 5% 1/4W	
R630	1-249-437-11	CARBON 47K 5% 1/4W	
R631	1-249-437-11	CARBON 47K 5% 1/4W	(E, EA, AUS, JE)
R632	1-249-437-11	CARBON 47K 5% 1/4W	(E, EA, AUS, JE)
R633	1-247-864-11	CARBON 24K 5% 1/4W	(AEP, UK, EE, G, IT)
R633	1-249-437-11	CARBON 47K 5% 1/4W	(E, EA, AUS, JE)
R634	1-247-864-11	CARBON 24K 5% 1/4W	(AEP, UK, EE, G, IT)
R634	1-249-437-11	CARBON 47K 5% 1/4W	(E, EA, AUS, JE)
R635	1-249-437-11	CARBON 47K 5% 1/4W	

When indicating parts by reference number, please include the board name.

Global electronic heritage manuals

www.freeservicemanuals.info

MAIN POWER AMP

Ref.No.	Part No.	Description	Remarks
R636	1-249-437-11	CARBON 47K 5% 1/4W	
R637	1-249-429-11	CARBON 10K 5% 1/4W	(E, EA, AUS, JE)
R639	1-249-438-11	CARBON 56K 5% 1/4W	
R640	1-249-438-11	CARBON 56K 5% 1/4W	
R641	1-249-435-11	CARBON 33K 5% 1/4W	
R642	1-249-435-11	CARBON 33K 5% 1/4W	
R643	1-249-441-11	CARBON 100K 5% 1/4W	
R644	1-249-441-11	CARBON 100K 5% 1/4W	
R645	1-249-435-11	CARBON 33K 5% 1/4W	
R646	1-249-435-11	CARBON 33K 5% 1/4W	
R647	1-249-438-11	CARBON 56K 5% 1/4W	
R648	1-249-438-11	CARBON 56K 5% 1/4W	
R649	1-249-429-11	CARBON 10K 5% 1/4W	
R650	1-249-429-11	CARBON 10K 5% 1/4W	
R652	1-249-429-11	CARBON 10K 5% 1/4W	
R653	1-249-441-11	CARBON 100K 5% 1/4W	
R655	1-247-895-00	CARBON 470K 5% 1/4W	(AEP, UK, EE, G, IT)
R656	1-247-895-00	CARBON 470K 5% 1/4W	(AEP, UK, EE, G, IT)
R701	1-249-435-11	CARBON 33K 5% 1/4W	
R702	1-249-435-11	CARBON 33K 5% 1/4W	
R703	1-249-429-11	CARBON 10K 5% 1/4W	
R704	1-249-429-11	CARBON 10K 5% 1/4W	
R705	1-247-903-00	CARBON 1M 5% 1/4W	
R706	1-247-903-00	CARBON 1M 5% 1/4W	
R707	1-247-903-00	CARBON 1M 5% 1/4W	
R708	1-247-903-00	CARBON 1M 5% 1/4W	
R709	1-247-903-00	CARBON 1M 5% 1/4W	
R710	1-247-903-00	CARBON 1M 5% 1/4W	
R711	1-247-903-00	CARBON 1M 5% 1/4W	
R712	1-247-903-00	CARBON 1M 5% 1/4W	
R713	1-247-903-00	CARBON 1M 5% 1/4W	
R714	1-247-903-00	CARBON 1M 5% 1/4W	
R715	1-247-903-00	CARBON 1M 5% 1/4W	
R716	1-247-903-00	CARBON 1M 5% 1/4W	
R717	1-247-903-00	CARBON 1M 5% 1/4W	
R718	1-247-903-00	CARBON 1M 5% 1/4W	
R719	1-247-903-00	CARBON 1M 5% 1/4W	
R720	1-247-903-00	CARBON 1M 5% 1/4W	
R721	1-249-429-11	CARBON 10K 5% 1/4W	
R722	1-249-429-11	CARBON 10K 5% 1/4W	
R723	1-249-436-11	CARBON 39K 5% 1/4W	
R724	1-249-436-11	CARBON 39K 5% 1/4W	
R725	1-249-437-11	CARBON 47K 5% 1/4W	
R726	1-249-437-11	CARBON 47K 5% 1/4W	
R727	1-249-429-11	CARBON 10K 5% 1/4W	
R728	1-249-429-11	CARBON 10K 5% 1/4W	
R729	1-249-429-11	CARBON 10K 5% 1/4W	
R730	1-249-417-11	CARBON 1K 5% 1/4W	
R733	1-247-887-00	CARBON 220K 5% 1/4W	
R734	1-247-887-00	CARBON 220K 5% 1/4W	
R735	1-249-437-11	CARBON 47K 5% 1/4W	
R751	1-249-427-11	CARBON 6.8K 5% 1/4W	
R752	1-249-427-11	CARBON 6.8K 5% 1/4W	
R753	1-249-441-11	CARBON 100K 5% 1/4W	
R754	1-249-441-11	CARBON 100K 5% 1/4W	
R780	1-249-417-11	CARBON 1K 5% 1/4W	
R781	1-249-417-11	CARBON 1K 5% 1/4W	
⚠R782	1-217-637-00	FUSIBLE 1 5% 1/4W	F
R783	1-249-393-11	CARBON 10 5% 1/4W	
R785	1-249-441-11	CARBON 100K 5% 1/4W	
R786	1-249-441-11	CARBON 100K 5% 1/4W	
R787	1-249-425-11	CARBON 4.7K 5% 1/4W	
R788	1-249-425-11	CARBON 4.7K 5% 1/4W	
R789	1-247-895-00	CARBON 470K 5% 1/4W	
R790	1-247-895-00	CARBON 470K 5% 1/4W	
R793	1-247-895-00	CARBON 470K 5% 1/4W	(AEP, UK, EE, G, IT)
R794	1-247-895-00	CARBON 470K 5% 1/4W	(AEP, UK, EE, G, IT)
		< VARIABLE RESISTOR >	
RV1	1-238-601-11	RES, ADJ, CARBON 22K	(FM TUNED LIGHTING LEVEL)
		< RELAY >	
RY601	1-515-920-11	RELAY (24V) (SPEAKER)	
		< TRANSFORMER >	
T1	1-402-424-11	COIL (ANT, SW3)	(E, EA, AUS, JE)
T2	1-402-960-11	COIL (OSC SW3)	(E, EA, AUS, JE)
		< TERMINAL >	
TB1	1-537-488-11	TERMINAL BOARD (ANTENNA)	(AEP, UK, EE, G, IT)
TB1	1-537-238-21	TERMINAL BOARD (ANTENNA)	(E, EA, AUS, JE)
* TB2	4-925-530-01	PLATE, GROUND (H71)	
		< VIBRATOR >	
X1	1-579-585-11	VIBRATOR, CRYSTAL (7.2MHz)	
X2	1-577-075-11	OSCILLATOR, CERAMIC (456kHz)	
X3	1-579-777-11	DISCRIMINATOR, CERAMIC (10.7MHz)	
**********			
*	A-4356-864-A	POWER AMP BOARD, COMPLETE	(E, EA, AUS, JE)
*	A-4356-865-A	POWER AMP BOARD, COMPLETE	(AEP, UK, EE)
*	A-4356-866-A	POWER AMP BOARD, COMPLETE	(G, IT)
		**********	
*	3-309-144-31	HEAT SINK	
	7-682-548-04	SCREW +BVTT 3X8	(S)
		< CAPACITOR >	
C800	1-124-903-11	ELECT 1uF 20%	50V

The components identified by mark ⚠ or dotted line with mark ⚠ are critical for safety.
Replace only with part number specified.

When indicating parts by reference number, please include the board name.

Global electronic heritage manuals

www.freeservicemanuals.info

POWER AMP

Ref.No.	Part No.	Description				Remarks
C801	1-124-903-11	ELECT	1uF	20%	50V	
C802	1-162-290-31	CERAMIC	470PF	10%	50V	
C803	1-162-290-31	CERAMIC	470PF	10%	50V	
C804	1-162-282-31	CERAMIC	100PF	10%	50V(EXCEPT G, IT)	
C804	1-162-294-31	CERAMIC	0.001uF	10%	50V(G, IT)	
C805	1-162-282-31	CERAMIC	100PF	10%	50V(EXCEPT G, IT)	
C805	1-162-294-31	CERAMIC	0.001uF	10%	50V(G, IT)	
C806	1-124-910-11	ELECT	47uF	20%	50V	
C807	1-124-910-11	ELECT	47uF	20%	50V	
C808	1-124-910-11	ELECT	47uF	20%	50V	
C809	1-124-910-11	ELECT	47uF	20%	50V	
C810	1-164-159-11	CERAMIC	0.1uF		50V	
C811	1-164-159-11	CERAMIC	0.1uF		50V	
C812	1-164-159-11	CERAMIC	0.1uF		50V	
C813	1-164-159-11	CERAMIC	0.1uF		50V	
C821	1-136-161-00	FILM	0.047uF	5%	50V	
C822	1-124-917-11	ELECT	33uF	20%	63V	
C823	1-124-917-11	ELECT	33uF	20%	63V	
C851	1-124-916-11	ELECT	22uF	20%	63V	
C852	1-124-925-11	ELECT	2.2uF	20%	100V	
C853	1-124-907-11	ELECT	10uF	20%	50V	
C854	1-126-176-11	ELECT	220uF	20%	10V	
C901	1-126-224-11	ELECT	4700uF	20%	42V	
C902	1-126-224-11	ELECT	4700uF	20%	42V	
C903	1-136-165-00	FILM	0.1uF	5%	50V	
C904	1-136-165-00	FILM	0.1uF	5%	50V	
C905	1-124-902-00	ELECT	0.47uF	20%	50V	
C906	1-124-894-11	ELECT	6800uF	20%	16V	
C907	1-124-887-00	ELECT	3300uF	20%	16V	
C908	1-124-925-11	ELECT	2.2uF	20%	100V	
C909	1-124-925-11	ELECT	2.2uF	20%	100V	
C910	1-124-927-11	ELECT	4.7uF	20%	100V	
C911	1-124-925-11	ELECT	2.2uF	20%	100V	
C912	1-124-472-11	ELECT	470uF	20%	10V	
C913	1-124-472-11	ELECT	470uF	20%	10V	
C914	1-124-907-11	ELECT	10uF	20%	50V	
C915	1-124-477-11	ELECT	47uF	20%	25V	
C916	1-124-907-11	ELECT	10uF	20%	50V	
C917	1-124-477-11	ELECT	47uF	20%	25V	
C918	1-161-379-00	CERAMIC	0.01uF	20%	25V	
C919	1-101-005-00	CERAMIC	22000PF		50V	
C920	1-162-294-31	CERAMIC	0.001uF	10%	50V	
C921	1-124-907-11	ELECT	10uF	20%	50V	

< CONNECTOR >

* CN801	1-750-532-11	CONNECTOR (B TO B) 6P	
* CN802	1-564-510-11	PLUG, CONNECTOR 7P	
* CN803	1-564-511-11	PLUG, CONNECTOR 8P	
* CN804	1-564-706-11	PIN, CONNECTOR (SMALL TYPE) 4P	

Ref.No.	Part No.	Description				Remarks
		< DIODE >				
D801	8-719-987-63	DIODE	1N4148M			
D851	8-719-987-63	DIODE	1N4148M			
D901	8-719-987-63	DIODE	1N4148M			
D902	8-719-987-63	DIODE	1N4148M			
D903	8-719-200-02	DIODE	10E2			
D904	8-719-200-02	DIODE	10E2			
D905	8-719-200-02	DIODE	10E2			
D906	8-719-200-02	DIODE	10E2			
D907	8-719-001-67	DIODE	UZL-12L3			
D908	8-719-933-41	DIODE	HZS6C3L			
D909	8-719-987-63	DIODE	1N4148M			
D910	8-719-987-63	DIODE	1N4148M			
D911	8-719-933-41	DIODE	HZS6C3L			
		< IC >				
⚠IC801	8-749-920-09	IC	STK4152MK2K			
IC802	8-759-111-68	IC	uPC1237HA			
IC901	8-759-602-66	IC	M5230L-A			
		< TRANSISTOR >				
Q801	8-729-140-84	TRANSISTOR	2SC1841-PAFAEA			
Q802	8-729-140-84	TRANSISTOR	2SC1841-PAFAEA			
Q850	8-729-900-63	TRANSISTOR	DTA124ES			
Q901	8-729-900-80	TRANSISTOR	DTC114ES			
Q902	8-729-900-89	TRANSISTOR	DTC144ES			
Q903	8-729-209-15	TRANSISTOR	2SD2012			
Q904	8-729-141-83	TRANSISTOR	2SB1094-LK			
Q905	8-729-900-89	TRANSISTOR	DTC144ES			
Q906	8-729-900-65	TRANSISTOR	DTA144ES			
Q907	8-729-018-60	TRANSISTOR	2SD2012-LC			
Q908	8-729-209-15	TRANSISTOR	2SD2012			
Q909	8-729-900-80	TRANSISTOR	DTC114ES			
		< RESISTOR >				
⚠R677	1-212-998-00	FUSIBLE	470	5%	1/2W	F
R800	1-249-438-11	CARBON	56K	5%	1/4W	
R801	1-249-438-11	CARBON	56K	5%	1/4W	
R802	1-249-414-11	CARBON	560	5%	1/4W	
R803	1-249-414-11	CARBON	560	5%	1/4W	
R804	1-249-438-11	CARBON	56K	5%	1/4W	
R805	1-249-438-11	CARBON	56K	5%	1/4W	
R806	1-249-421-11	CARBON	2.2K	5%	1/4W	
R807	1-249-421-11	CARBON	2.2K	5%	1/4W	
R808	1-247-756-11	CARBON	2.2K	5%	1/2W	
R809	1-247-756-11	CARBON	2.2K	5%	1/2W	
R810	1-249-417-11	CARBON	1K	5%	1/4W	
R811	1-249-417-11	CARBON	1K	5%	1/4W	
R812	1-249-431-11	CARBON	15K	5%	1/4W	

The components identified by mark ⚠ or dotted line with mark ⚠ are critical for safety.
Replace only with part number specified.

When indicating parts by reference number, please include the board name.

Global electronic heritage manuals

www.freeservicemanuals.info

POWER AMP SW (DECK-A) AUDIO (DECK-A)

Ref.No.	Part No.	Description				Remarks
R813	1-249-431-11	CARBON	15K	5%	1/4W	
R814	1-249-441-11	CARBON	100K	5%	1/4W	
R815	1-249-441-11	CARBON	100K	5%	1/4W	
⚠R816	1-217-151-00	RES, METAL PLATE	0.22		2W	
⚠R817	1-217-151-00	RES, METAL PLATE	0.22		2W	
R818	1-247-727-11	CARBON	10	5%	1/2W	
R819	1-247-727-11	CARBON	10	5%	1/2W	
R820	1-249-438-11	CARBON	56K	5%	1/4W	
R821	1-249-437-11	CARBON	47K	5%	1/4W	
⚠R831	1-212-881-11	FUSIBLE	100	5%	1/4W	F
⚠R832	1-212-881-11	FUSIBLE	100	5%	1/4W	F
R851	1-249-422-11	CARBON	2.7K	5%	1/4W	
R852	1-249-439-11	CARBON	68K	5%	1/4W	
R853	1-249-423-11	CARBON	3.3K	5%	1/4W	
R854	1-249-417-11	CARBON	1K	5%	1/4W	
R855	1-249-433-11	CARBON	22K	5%	1/4W	
R856	1-249-441-11	CARBON	100K	5%	1/4W	
R903	1-249-417-11	CARBON	1K	5%	1/4W	
R904	1-249-429-11	CARBON	10K	5%	1/4W	
R905	1-247-903-00	CARBON	1M	5%	1/4W	
R906	1-249-409-11	CARBON	220	5%	1/4W	
R907	1-249-409-11	CARBON	220	5%	1/4W	
R908	1-249-407-11	CARBON	150	5%	1/4W	
R909	1-249-407-11	CARBON	150	5%	1/4W	
R910	1-249-431-11	CARBON	15K	5%	1/4W	
R911	1-249-431-11	CARBON	15K	5%	1/4W	
R912	1-249-429-11	CARBON	10K	5%	1/4W	
R913	1-249-423-11	CARBON	3.3K	5%	1/4W	
⚠R914	1-212-990-00	FUSIBLE	220	5%	1/2W	F
R915	1-249-420-11	CARBON	1.8K	5%	1/4W	
⚠R916	1-212-853-00	FUSIBLE	6.8	5%	1/4W	F
R917	1-249-413-11	CARBON	470	5%	1/4W	
R918	1-249-417-11	CARBON	1K	5%	1/4W	
R919	1-249-417-11	CARBON	1K	5%	1/4W	
R920	1-249-425-11	CARBON	4.7K	5%	1/4W	
R921	1-249-417-11	CARBON	1K	5%	1/4W	

****

* 1-634-841-14 SW BOARD (DECK-A)
****

3-343-419-01 HOLDER (S SENSOR A)

< CONNECTOR >

* CNP81 1-568-852-11 SOCKET, CONNECTOR 9P

< IC >

IC81 8-719-710-03 DIODE NJL5165K-B

< RESISTOR >

R84	1-249-417-11	CARBON	1K	5%	1/4W	
R85	1-249-408-11	CARBON	180	5%	1/4W	

< SWITCH >

S81	1-571-958-11	SWITCH, PUSH (1 KEY) (STOP DET)				
S82	1-571-281-21	SWITCH, LEAF (CrO_2 DET)				
S86	1-571-281-21	SWITCH, LEAF (HALF DE)				

****

* A-2006-399-A MOUNTED PCB (RA12A), AUDIO (DECK-A)
****

< CAPACITOR >

C11	1-163-131-00	CERAMIC CHIP	390PF	5%	50V	
C12	1-136-157-00	FILM	0.022uF	5%	50V	
C13	1-124-234-00	ELECT	22uF	20%	16V	
C18	1-163-117-00	CERAMIC CHIP	100PF	5%	50V	
C21	1-163-131-00	CERAMIC CHIP	390PF	5%	50V	
C22	1-136-157-00	FILM	0.022uF	5%	50V	
C23	1-124-234-00	ELECT	22uF	20%	16V	
C28	1-163-117-00	CERAMIC CHIP	100PF	5%	50V	
C31	1-124-234-00	ELECT	22uF	20%	16V	
C32	1-124-234-00	ELECT	22uF	20%	16V	
C72	1-124-499-11	ELECT, NONPOLAR	1uF	20%	50V	

< CONNECTOR >

* CNJ31	1-580-782-11	CONNECTOR, BOARD TO BOARD 10P
* CNJ72	1-580-411-11	SOCKET, CONNECTOR 4P
* CNP32	1-580-772-11	PIN, CONNECTOR (PC BOARD) 4P
* CNP71	1-564-719-11	PIN, CONNECTOR (SMALL TYPE) 3P

< IC >

IC31 8-759-106-02 IC uPC4570G2

< JUMPER RESISTOR >

JW1	1-216-295-00	METAL CHIP	0	5%	1/10W
JW51	1-216-296-00	METAL CHIP	0	5%	1/8W
JW52	1-216-296-00	METAL CHIP	0	5%	1/8W
JW53	1-216-296-00	METAL CHIP	0	5%	1/8W
JW54	1-216-296-00	METAL CHIP	0	5%	1/8W

< TRANSISTOR >

Q71 8-729-602-36 TRANSISTOR 2SA1602-F

< RESISTOR >

R11	1-216-099-00	METAL CHIP	120K	5%	1/10W
R12	1-216-025-00	METAL CHIP	100	5%	1/10W
R13	1-216-100-00	METAL GLAZE	130K	5%	1/10W

The components identified by mark ⚠ or dotted line with mark ⚠ are critical for safety.
Replace only with part number specified.

When indicating parts by reference number, please include the board name.

Global electronic heritage manuals

www.freeservicemanuals.info

AUDIO (DECK-A) SW (DECK-B) AUDIO (DECK-B)

Ref.No.	Part No.	Description				Remarks
R14	1-216-067-00	METAL CHIP	5.6K	5%	1/10W	
R21	1-216-099-00	METAL CHIP	120K	5%	1/10W	
R22	1-216-025-00	METAL CHIP	100	5%	1/10W	
R23	1-216-100-00	METAL GLAZE	130K	5%	1/10W	
R24	1-216-067-00	METAL CHIP	5.6K	5%	1/10W	
R31	1-216-033-00	METAL CHIP	220	5%	1/10W	
R32	1-216-033-00	METAL CHIP	220	5%	1/10W	
R71	1-216-082-00	METAL GLAZE	24K	5%	1/10W	
R72	1-216-081-00	METAL CHIP	22K	5%	1/10W	
R73	1-216-089-00	METAL CHIP	47K	5%	1/10W	
R74	1-216-089-00	METAL CHIP	47K	5%	1/10W	
		< VARIABLE RESISTOR >				
RV11	1-241-627-11	RES, ADJ, CARBON 1K (PB LEVEL L)				
RV21	1-241-627-11	RES, ADJ, CARBON 1K (PB LEVEL R)				
RV71	1-241-630-11	RES, ADJ, CARBON 10K (NORMAL SPEED)				
RV72	1-241-630-11	RES, ADJ, CARBON 10K (HIGH SPEED)				
**********						
*	1-634-841-14	SW BOARD (DECK-B)				
		**********				
	3-343-419-01	HOLDER (S SENSOR A)				
		< CONNECTOR >				
* CNP81	1-568-852-11	SOCKET, CONNECTOR 9P				
		< IC >				
IC81	8-719-710-03	DIODE NJL5165K-B				
		< RESISTOR >				
R81	1-249-414-11	CARBON	560	5%	1/4W	
R82	1-247-818-11	CARBON	300	5%	1/4W	
R83	1-247-834-11	CARBON	1.3K	5%	1/4W	
R84	1-249-417-11	CARBON	1K	5%	1/4W	
R85	1-249-408-11	CARBON	180	5%	1/4W	
		< SWITCH >				
S81	1-571-958-11	SWITCH, PUSH (1 KEY) (STOP DET)				
S82	1-571-281-21	SWITCH, LEAF (CrO_2 DET)				
S83	1-571-281-21	SWITCH, LEAF (METAL DET)				
S84	1-571-281-21	SWITCH, LEAF (ERASE PROOF DECK-A)				
S85	1-571-281-21	SWITCH, LEAF (ERASE PROOF DECK-B)				
S86	1-571-281-21	SWITCH, LEAF (HALF DET)				
**********						
*	A-2006-400-A	MOUNTED PCB (RB22A), AUDIO (DECK-B)				
		**********				
		< CAPACITOR >				
C11	1-163-131-00	CERAMIC CHIP	390PF	5%	50V	
C12	1-136-157-00	FILM	0.022uF	5%	50V	
C13	1-124-234-00	ELECT	22uF	20%	16V	
C14	1-136-273-11	FILM	75PF	5%	630V	
C15	1-164-080-11	CERAMIC	390PF	10%	50V	
C17	1-163-103-00	CERAMIC CHIP	27PF	5%	50V	
C18	1-163-117-00	CERAMIC CHIP	100PF	5%	50V	
C21	1-163-131-00	CERAMIC CHIP	390PF	5%	50V	
C22	1-136-157-00	FILM	0.022uF	5%	50V	
C23	1-124-234-00	ELECT	22uF	20%	16V	
C24	1-136-273-11	FILM	75PF	5%	630V	
C25	1-164-080-11	CERAMIC	390PF	10%	50V	
C27	1-163-103-00	CERAMIC CHIP	27PF	5%	50V	
C28	1-163-117-00	CERAMIC CHIP	100PF	5%	50V	
C31	1-124-234-00	ELECT	22uF	20%	16V	
C32	1-124-234-00	ELECT	22uF	20%	16V	
C33	1-124-234-00	ELECT	22uF	20%	16V	
C51	1-163-019-00	CERAMIC CHIP	0.0068uF	10%	50V	
C52	1-163-019-00	CERAMIC CHIP	0.0068uF	10%	50V	
C53	1-163-022-00	CERAMIC CHIP	0.012uF	10%	50V	
C54	1-136-559-11	FILM	0.0047uF	5%	630V	
C56	1-164-505-11	CERAMIC CHIP	2.2uF		16V	
C57	1-164-346-11	CERAMIC CHIP	1uF		16V	
C58	1-163-024-00	CERAMIC CHIP	0.018uF	10%	50V	
C72	1-124-499-11	ELECT, NONPOLAR	1uF	20%	50V	
		< CONNECTOR >				
* CNJ31	1-580-782-11	CONNECTOR, BOARD TO BOARD 10P				
* CNJ33	1-580-782-11	CONNECTOR, BOARD TO BOARD 10P				
* CNJ72	1-580-411-11	SOCKET, CONNECTOR 4P				
* CNP32	1-580-781-11	PIN, CONNECTOR (PC BOARD) 7P				
* CNP71	1-564-719-11	PIN, CONNECTOR (SMALL TYPE) 3P				
		< DIODE >				
D31	8-719-016-74	DIODE 1SS352				
		< IC >				
IC31	8-759-106-02	IC uPC4570G2				
		< JUMPER RESISTOR >				
JW1	1-216-296-00	METAL CHIP	0	5%	1/8W	
JW2	1-216-295-00	METAL CHIP	0	5%	1/10W	
JW3	1-216-295-00	METAL CHIP	0	5%	1/10W	
JW4	1-216-295-00	METAL CHIP	0	5%	1/10W	
JW6	1-216-295-00	METAL CHIP	0	5%	1/10W	
JW7	1-216-295-00	METAL CHIP	0	5%	1/10W	
JW52	1-216-296-00	METAL CHIP	0	5%	1/8W	
JW53	1-216-296-00	METAL CHIP	0	5%	1/8W	
JW54	1-216-296-00	METAL CHIP	0	5%	1/8W	
JW55	1-216-296-00	METAL CHIP	0	5%	1/8W	
JW56	1-216-296-00	METAL CHIP	0	5%	1/8W	

When indicating parts by reference number, please include the board name.

Global electronic heritage manuals

www.freeservicemanuals.info

AUDIO (DECK-B) TC

Ref.No.	Part No.	Description				Remarks
JW57	1-216-296-00	METAL CHIP	0	5%	1/8W	
JW58	1-216-296-00	METAL CHIP	0	5%	1/8W	
JW59	1-216-296-00	METAL CHIP	0	5%	1/8W	
JW60	1-216-296-00	METAL CHIP	0	5%	1/8W	
JW61	1-216-296-00	METAL CHIP	0	5%	1/8W	
		< COIL >				
L11	1-410-780-11	INDUCTOR	27mH			
L21	1-410-780-11	INDUCTOR	27mH			
		< TRANSISTOR >				
Q51	8-729-808-01	TRANSISTOR	2SD1622-S			
Q52	8-729-808-01	TRANSISTOR	2SD1622-S			
Q53	8-729-808-01	TRANSISTOR	2SD1622-S			
Q71	8-729-602-36	TRANSISTOR	2SA1602-F			
		< RESISTOR >				
R11	1-216-099-00	METAL CHIP	120K	5%	1/10W	
R12	1-216-025-00	METAL CHIP	100	5%	1/10W	
R13	1-216-100-00	METAL GLAZE	130K	5%	1/10W	
R14	1-216-067-00	METAL CHIP	5.6K	5%	1/10W	
⚠R15	1-249-430-11	CARBON	12K	5%	1/4W	F
R21	1-216-099-00	METAL CHIP	120K	5%	1/10W	
R22	1-216-025-00	METAL CHIP	100	5%	1/10W	
R23	1-216-100-00	METAL GLAZE	130K	5%	1/10W	
R24	1-216-067-00	METAL CHIP	5.6K	5%	1/10W	
⚠R25	1-249-430-11	CARBON	12K	5%	1/4W	F
R31	1-216-033-00	METAL CHIP	220	5%	1/10W	
R32	1-216-033-00	METAL CHIP	220	5%	1/10W	
⚠R41	1-249-393-11	CARBON	10	5%	1/4W	F
⚠R42	1-249-393-11	CARBON	10	5%	1/4W	F
R51	1-216-075-00	METAL CHIP	12K	5%	1/10W	
R52	1-216-075-00	METAL CHIP	12K	5%	1/10W	
R53	1-216-073-00	METAL CHIP	10K	5%	1/10W	
R54	1-216-309-00	METAL CHIP	5.6	5%	1/10W	
R55	1-216-309-00	METAL CHIP	5.6	5%	1/10W	
R56	1-216-298-00	METAL CHIP	2.2	5%	1/10W	
R71	1-216-082-00	METAL GLAZE	24K	5%	1/10W	
R72	1-216-081-00	METAL CHIP	22K	5%	1/10W	
R73	1-216-089-00	METAL CHIP	47K	5%	1/10W	
R74	1-216-089-00	METAL CHIP	47K	5%	1/10W	
		< VARIABLE RESISTOR >				
RV11	1-241-627-11	RES, ADJ, CARBON 1K (PB LEVEL L)				
RV12	1-238-551-11	RES, ADJ, CARBON 220K (REC BIAS L)				
RV21	1-241-627-11	RES, ADJ, CARBON 1K (PB LEVEL R)				
RV22	1-238-551-11	RES, ADJ, CARBON 220K (REC BIAS R)				
RV71	1-241-630-11	RES, ADJ, CARBON 10K (NORMAL SPEED)				
RV72	1-241-630-11	RES, ADJ, CARBON 10K (HIGH SPEED)				

Ref.No.	Part No.	Description				Remarks
		< RELAY >				
RY31	1-515-913-11	RELAY (REC/PB)				
		< TRANSFORMER >				
T51	1-406-419-11	COIL, BIAS OSCILLATION				
**********						
*	A-4356-877-A	TC BOARD, COMPLETE (EXCEPT G, IT)				
*	A-4356-878-A	TC BOARD, COMPLETE (G, IT)				
		**********				
		< CAPACITOR >				
C121	1-124-443-00	ELECT	100uF	20%	10V	
C122	1-101-003-00	CERAMIC	0.0047uF		50V	
C123	1-124-903-11	ELECT	1uF	20%	50V	
C125	1-124-907-11	ELECT	10uF	20%	50V	
C126	1-136-165-00	FILM	0.1uF	5%	50V	
C127	1-124-907-11	ELECT	10uF	20%	50V	
C128	1-124-903-11	ELECT	1uF	20%	50V	
C129	1-124-902-00	ELECT	0.47uF	20%	50V	
C130	1-124-907-11	ELECT	10uF	20%	50V	
C131	1-164-159-11	CERAMIC	0.1uF		50V	
C132	1-124-907-11	ELECT	10uF	20%	50V	
C134	1-162-294-31	CERAMIC	0.001uF	10%	50V	
C221	1-124-443-00	ELECT	100uF	20%	10V	
C222	1-101-003-00	CERAMIC	0.0047uF		50V	
C223	1-124-903-11	ELECT	1uF	20%	50V	
C225	1-124-907-11	ELECT	10uF	20%	50V	
C226	1-136-165-00	FILM	0.1uF	5%	50V	
C227	1-124-907-11	ELECT	10uF	20%	50V	
C228	1-124-903-11	ELECT	1uF	20%	50V	
C229	1-124-902-00	ELECT	0.47uF	20%	50V	
C230	1-124-907-11	ELECT	10uF	20%	50V	
C231	1-161-377-00	CERAMIC	0.0047uF	30%	16V	
C232	1-101-002-00	CERAMIC	0.0022uF		50V	
C233	1-124-902-00	ELECT	0.47uF	20%	50V	
C234	1-162-294-31	CERAMIC	0.001uF	10%	50V	
C401	1-124-443-00	ELECT	100uF	20%	10V	
C402	1-124-126-00	ELECT	47uF	20%	10V	
C403	1-164-159-11	CERAMIC	0.1uF		50V	
C404	1-124-903-11	ELECT	1uF	20%	50V	
C405	1-126-101-11	ELECT	100uF	20%	16V	
C406	1-126-101-11	ELECT	100uF	20%	16V	
C451	1-126-101-11	ELECT	100uF	20%	16V	
C452	1-126-101-11	ELECT	100uF	20%	16V	
C453	1-161-379-00	CERAMIC	0.01uF	20%	25V	
C454	1-161-379-00	CERAMIC	0.01uF	20%	25V	
C456	1-162-290-31	CERAMIC	470PF	10%	50V	
C457	1-162-290-31	CERAMIC	470PF	10%	50V	

The components identified by mark ⚠ or dotted line with mark ⚠ are critical for safety.
Replace only with part number specified.

When indicating parts by reference number, please include the board name.

Global electronic heritage manuals

www.freeservicemanuals.info

TC

Ref. No.	Part No.	Description		Remarks
C458	1-164-159-11	CERAMIC	0.1uF	50V
C459	1-164-159-11	CERAMIC	0.1uF	50V
		< CONNECTOR >		
* CN401	1-564-517-11	PLUG, CONNECTOR 2P (TEST MODE)		
CN402	1-580-783-11	CONNECTOR, BOARD TO BOARD 10P		
CN403	1-580-783-11	CONNECTOR, BOARD TO BOARD 10P		
CN404	1-580-783-11	CONNECTOR, BOARD TO BOARD 10P		
CN405	1-573-101-11	SOCKET, CONNECTOR 9P		
CN406	1-573-101-11	SOCKET, CONNECTOR 9P		
* CN407	1-565-980-11	HOUSING, CONNECTOR(PC BOARD) 9P		
* CN408	1-565-980-11	HOUSING, CONNECTOR(PC BOARD) 9P		
CN409	1-695-366-21	PIN, CONNECTOR (PC BOARD) 5P		
CN410	1-695-376-21	PIN, CONNECTOR (PC BOARD) 15P		
* CN411	1-564-520-11	PLUG, CONNECTOR 5P		
		< DIODE >		
D301	8-719-200-02	DIODE	10E2	
D302	8-719-200-02	DIODE	10E2	
D351	8-719-987-63	DIODE	1N4148M	
D402	8-719-987-63	DIODE	1N4148M	
D403	8-719-987-63	DIODE	1N4148M	
		< IC >		
IC401	8-759-166-04	IC	M50964-260FPK	
IC402	8-759-520-90	IC	PST572E	
IC403	8-759-098-75	IC	HA12171NT	
IC404	8-759-207-05	IC	TA7272P	
		< COIL >		
L401	1-410-482-31	INDUCTOR	100uH	
L402	1-410-482-31	INDUCTOR	100uH	
		< TRANSISTOR >		
Q101	8-729-620-05	TRANSISTOR	2SC2603-EF	
Q201	8-729-620-05	TRANSISTOR	2SC2603-EF	
Q305	8-729-900-80	TRANSISTOR	DTC114ES	
Q306	8-729-620-05	TRANSISTOR	2SC2603-EF	
Q400	8-729-422-57	TRANSISTOR	UN4111	
Q401	8-729-900-65	TRANSISTOR	DTA144ES	
Q402	8-729-900-65	TRANSISTOR	DTA144ES	
Q403	8-729-900-65	TRANSISTOR	DTA144ES	
Q404	8-729-900-65	TRANSISTOR	DTA144ES	
Q405	8-729-900-65	TRANSISTOR	DTA144ES	
Q407	8-729-900-89	TRANSISTOR	DTC144ES	
Q408	8-729-900-65	TRANSISTOR	DTA144ES	
Q411	8-729-801-84	TRANSISTOR	2SB1013-4	
Q412	8-729-801-84	TRANSISTOR	2SB1013-4	
Q413	8-729-900-65	TRANSISTOR	DTA144ES	
Q414	8-729-900-89	TRANSISTOR	DTC144ES	
Q415	8-729-620-05	TRANSISTOR	2SC2603-EF	
		< RESISTOR >		
R121	1-249-430-11	CARBON	12K 5% 1/4W	
R122	1-249-431-11	CARBON	15K 5% 1/4W	
R123	1-215-451-00	METAL	18K 1% 1/6W	
R124	1-249-429-11	CARBON	10K 5% 1/4W	
R125	1-249-429-11	CARBON	10K 5% 1/4W	
R127	1-249-429-11	CARBON	10K 5% 1/4W	
R130	1-249-429-11	CARBON	10K 5% 1/4W	
R131	1-249-425-11	CARBON	4.7K 5% 1/4W	
R132	1-249-429-11	CARBON	10K 5% 1/4W	
R133	1-249-429-11	CARBON	10K 5% 1/4W	
R135	1-247-864-11	CARBON	24K 5% 1/4W	
R137	1-249-426-11	CARBON	5.6K 5% 1/4W	
R141	1-249-421-11	CARBON	2.2K 5% 1/4W	
R142	1-247-838-00	CARBON	2K 5% 1/4W	
R143	1-247-846-11	CARBON	4.3K 5% 1/4W	
R144	1-249-433-11	CARBON	22K 5% 1/4W	
R145	1-249-425-11	CARBON	4.7K 5% 1/4W	
R221	1-249-430-11	CARBON	12K 5% 1/4W	
R222	1-249-431-11	CARBON	15K 5% 1/4W	
R223	1-249-426-11	CARBON	5.6K 5% 1/4W	
R224	1-249-429-11	CARBON	10K 5% 1/4W	
R225	1-249-441-11	CARBON	100K 5% 1/4W	
R226	1-247-864-11	CARBON	24K 5% 1/4W	
R227	1-249-429-11	CARBON	10K 5% 1/4W	
R229	1-249-429-11	CARBON	10K 5% 1/4W	
R230	1-249-432-11	CARBON	18K 5% 1/4W	
R231	1-247-885-00	CARBON	180K 5% 1/4W	
R241	1-249-421-11	CARBON	2.2K 5% 1/4W	
R242	1-247-838-00	CARBON	2K 5% 1/4W	
R243	1-247-846-11	CARBON	4.3K 5% 1/4W	
R244	1-249-433-11	CARBON	22K 5% 1/4W	
R245	1-249-425-11	CARBON	4.7K 5% 1/4W	
⚠R301	1-249-390-81	CARBON	5.6 5% 1/4W	F
⚠R305	1-212-857-00	FUSIBLE	10 5% 1/4W	F
⚠R306	1-212-857-00	FUSIBLE	10 5% 1/4W	F
R351	1-249-429-11	CARBON	10K 5% 1/4W	
R401	1-249-429-11	CARBON	10K 5% 1/4W	
R402	1-247-903-00	CARBON	1M 5% 1/4W	
R403	1-247-895-00	CARBON	470K 5% 1/4W	
R404	1-247-895-00	CARBON	470K 5% 1/4W	
R405	1-249-408-11	CARBON	180 5% 1/4W	
R406	1-249-408-11	CARBON	180 5% 1/4W	
R408	1-249-408-11	CARBON	180 5% 1/4W	
R409	1-249-408-11	CARBON	180 5% 1/4W	
R411	1-249-407-11	CARBON	150 5% 1/4W	
R412	1-249-410-11	CARBON	270 5% 1/4W	

The components identified by mark ⚠ or dotted line with mark ⚠ are critical for safety.
Replace only with part number specified.

When indicating parts by reference number, please include the board name.

Global electronic heritage manuals

www.freeservicemanuals.info

Ref.No.	Part No.	Description				Remarks
R413	1-249-421-11	CARBON	2.2K	5%	1/4W	
R414	1-249-421-11	CARBON	2.2K	5%	1/4W	
R415	1-249-429-11	CARBON	10K	5%	1/4W	
R416	1-249-425-11	CARBON	4.7K	5%	1/4W	
R417	1-249-441-11	CARBON	100K	5%	1/4W	
R419	1-249-417-11	CARBON	1K	5%	1/4W	
R420	1-249-429-11	CARBON	10K	5%	1/4W	
R421	1-249-425-11	CARBON	4.7K	5%	1/4W	
R422	1-249-429-11	CARBON	10K	5%	1/4W	
R431	1-249-429-11	CARBON	10K	5%	1/4W	
R432	1-249-415-11	CARBON	680	5%	1/4W	
R433	1-249-429-11	CARBON	10K	5%	1/4W	
R434	1-249-415-11	CARBON	680	5%	1/4W	
R451	1-249-425-11	CARBON	4.7K	5%	1/4W	
R452	1-249-435-11	CARBON	33K	5%	1/4W	
R453	1-249-437-11	CARBON	47K	5%	1/4W	
R454	1-247-872-11	CARBON	51K	5%	1/4W	
R455	1-247-862-11	CARBON	20K	5%	1/4W	
R456	1-247-866-11	CARBON	30K	5%	1/4W	
R457	1-247-872-11	CARBON	51K	5%	1/4W	
R458	1-249-405-11	CARBON	100	5%	1/4W	
R459	1-249-381-11	CARBON	1	5%	1/4W	
R460	1-249-381-11	CARBON	1	5%	1/4W	
R461	1-249-425-11	CARBON	4.7K	5%	1/4W	
R462	1-249-435-11	CARBON	33K	5%	1/4W	
R463	1-249-437-11	CARBON	47K	5%	1/4W	
R464	1-247-872-11	CARBON	51K	5%	1/4W	
R465	1-247-862-11	CARBON	20K	5%	1/4W	
R466	1-247-866-11	CARBON	30K	5%	1/4W	
R467	1-247-872-11	CARBON	51K	5%	1/4W	
R468	1-249-405-11	CARBON	100	5%	1/4W	
R469	1-249-381-11	CARBON	1	5%	1/4W	
R470	1-249-381-11	CARBON	1	5%	1/4W	
R471	1-249-425-11	CARBON	4.7K	5%	1/4W	
R472	1-249-434-11	CARBON	27K	5%	1/4W	
R473	1-249-425-11	CARBON	4.7K	5%	1/4W	
R474	1-249-429-11	CARBON	10K	5%	1/4W	
R475	1-249-434-11	CARBON	27K	5%	1/4W	
R476	1-249-429-11	CARBON	10K	5%	1/4W	
R477	1-249-410-11	CARBON	270	5%	1/4W	
R478	1-249-410-11	CARBON	270	5%	1/4W	
		< VARIABLE RESISTOR >				
RV103	1-241-136-11	RES, ADJ, CARBON 10K (REC LEVEL L)				
RV203	1-241-136-11	RES, ADJ, CARBON 10K (REC LEVEL R)				
		< VIBRATOR >				
X401	1-577-358-21	VIBRATOR, CERAMIC (4MHz)				

****

Ref.No.	Part No.	Description	Remarks
*	A-4356-879-A	SWITCH BOARD, COMPLETE	
		**********	
		< CONNECTOR >	
CN551	1-695-376-21	PIN, CONNECTOR (PC BOARD) 15P	
		< DIODE >	
D551	8-719-032-87	LED SEL5420S-TP (◁ ◀◀ AMS DECK-A)	
D552	8-719-032-87	LED SEL5420S-TP (▷ ▶▶ AMS DECK-A)	
D553	8-719-032-83	LED SEL5220S-TP (HIGH SPEED DUBBING)	
D555	8-719-032-83	LED SEL5220S-TP (CD SYNCHRO)	
D556	8-719-033-07	LED SEL5920A-TP15 (▮▮ PAUSE)	
D557	8-719-032-87	LED SEL5420S-TP (◁ ◀◀ AMS DECK-B)	
D558	8-719-032-87	LED SEL5420S-TP (▷ ▶▶ AMS DECK-B)	
D559	8-719-032-83	LED SEL5220S-TP (● REC)	
		< RESISTOR >	
R551	1-249-407-11	CARBON 150 5% 1/4W	
R552	1-249-409-11	CARBON 220 5% 1/4W	
R553	1-249-411-11	CARBON 330 5% 1/4W	
R554	1-249-413-11	CARBON 470 5% 1/4W	
R555	1-249-415-11	CARBON 680 5% 1/4W	
R556	1-249-417-11	CARBON 1K 5% 1/4W	
R557	1-249-420-11	CARBON 1.8K 5% 1/4W	
R558	1-249-424-11	CARBON 3.9K 5% 1/4W	
R559	1-249-407-11	CARBON 150 5% 1/4W	
R560	1-249-409-11	CARBON 220 5% 1/4W	
R561	1-249-411-11	CARBON 330 5% 1/4W	
R562	1-249-413-11	CARBON 470 5% 1/4W	
R563	1-249-415-11	CARBON 680 5% 1/4W	
R564	1-249-417-11	CARBON 1K 5% 1/4W	
R565	1-249-426-11	CARBON 5.6K 5% 1/4W	
R566	1-249-430-11	CARBON 12K 5% 1/4W	
R574	1-249-405-11	CARBON 100 5% 1/4W	
R575	1-249-406-11	CARBON 120 5% 1/4W	
R576	1-249-406-11	CARBON 120 5% 1/4W	
R577	1-249-407-11	CARBON 150 5% 1/4W	
R578	1-249-408-11	CARBON 180 5% 1/4W	
R579	1-249-409-11	CARBON 220 5% 1/4W	
R580	1-249-410-11	CARBON 270 5% 1/4W	
R581	1-249-411-11	CARBON 330 5% 1/4W	
R582	1-249-413-11	CARBON 470 5% 1/4W	
R583	1-249-414-11	CARBON 560 5% 1/4W	
R584	1-249-416-11	CARBON 820 5% 1/4W	
R585	1-249-418-11	CARBON 1.2K 5% 1/4W	
R586	1-249-421-11	CARBON 2.2K 5% 1/4W	
		< SWITCH >	
S551	1-572-184-11	SWITCH, KEYBOARD (■ DECK-A)	

When indicating parts by reference number, please include the board name.

Global electronic heritage manuals

www.freeservicemanuals.info

SWITCH VOL JACK POWER SUPPLY

Ref.No.	Part No.	Description	Remarks
S552	1-572-184-11	SWITCH, KEYBOARD (▷ ▶▶ AMS DECK-A)	
S553	1-572-184-11	SWITCH, KEYBOARD (◁ ◀◀ AMS DECK-A)	
S554	1-572-184-11	SWITCH, KEYBOARD (◀◀ DECK-B)	
S555	1-572-184-11	SWITCH, KEYBOARD (▶▶ DECK-B)	
S556	1-572-184-11	SWITCH, KEYBOARD (● REC DECK-B)	
S557	1-572-184-11	SWITCH, KEYBOARD (HIGH SPEED DUBBING)	
S559	1-572-184-11	SWITCH, KEYBOARD (CD SYNCHRO)	
S560	1-572-184-11	SWITCH, KEYBOARD (■ DECK-B)	
S561	1-572-184-11	SWITCH, KEYBOARD (❚❚ PAUSE DECK-B)	
S562	1-572-184-11	SWITCH, KEYBOARD (▷ ▶▶ AMS DECK-B)	
S563	1-572-184-11	SWITCH, KEYBOARD (◁ ◀◀ AMS DECK-B)	
S564	1-572-184-11	SWITCH, KEYBOARD (◀◀ DECK-A)	
S565	1-572-184-11	SWITCH, KEYBOARD (▶▶ DECK-A)	
S566	1-572-378-11	SWITCH, SLIDE (DIRECTION)	
S567	1-572-184-11	SWITCH, KEYBOARD (⏏ OPEN/CLOSE)	
S568	1-572-184-11	SWITCH, KEYBOARD (■)	
S569	1-572-184-11	SWITCH, KEYBOARD (❚❚)	
S570	1-572-184-11	SWITCH, KEYBOARD (▷)	
S571	1-572-184-11	SWITCH, KEYBOARD (▯◁◁ ◀◀)	
S572	1-572-184-11	SWITCH, KEYBOARD (▷▷▯ ▶▶)	
S573	1-572-184-11	SWITCH, KEYBOARD (TIME)	
S574	1-572-184-11	SWITCH, KEYBOARD (REPEAT)	
S575	1-572-184-11	SWITCH, KEYBOARD (PROGRAM)	
S576	1-572-184-11	SWITCH, KEYBOARD (SHUFFLE)	
S577	1-572-184-11	SWITCH, KEYBOARD (CONTINUE)	
S578	1-572-184-11	SWITCH, KEYBOARD (EDIT)	
S579	1-572-184-11	SWITCH, KEYBOARD (CLEAR)	
S580	1-572-184-11	SWITCH, KEYBOARD (CHECK)	
S587	1-572-347-31	SWITCH, SLIDE (DOLBY NR)	

****

* 1-646-894-11 VOL BOARD
****

< CAPACITOR >

C200	1-126-924-11	ELECT	330uF	20%	10V
C201	1-124-907-11	ELECT	10uF	20%	50V
C202	1-124-907-11	ELECT	10uF	20%	50V

< CONNECTOR >

* CN201 1-566-972-11 PIN, CONNECTOR (PC BOARD) 7P

< IC >

IC200 8-759-820-62 IC LB1639

< RESISTOR >

R200	1-249-417-11	CARBON	1K	5%	1/4W
R201	1-249-417-11	CARBON	1K	5%	1/4W
R202	1-249-429-11	CARBON	10K	5%	1/4W

< VARIABLE RESISTOR >

RV200 1-223-301-11 RES, VAR, CARBON(WITH MOTOR) 10K (VOLUME)

****

* 1-646-897-11 JACK BOARD
****

< CAPACITOR >

C250	1-162-282-31	CERAMIC	100PF	10%	50V
C251	1-162-282-31	CERAMIC	100PF	10%	50V
C260	1-162-294-31	CERAMIC	0.001uF	10%	50V(E, EA, AUS, JE)
C261	1-162-294-31	CERAMIC	0.001uF	10%	50V(E, EA, AUS, JE)
C262	1-162-282-31	CERAMIC	100PF	10%	50V(E, EA, AUS, JE)
C263	1-162-215-31	CERAMIC	47PF	5%	50V(E, EA, AUS, JE)
C264	1-124-463-00	ELECT	0.1uF	20%	50V(E, EA, AUS, JE)
C265	1-124-463-00	ELECT	0.1uF	20%	50V(E, EA, AUS, JE)
C266	1-124-463-00	ELECT	0.1uF	20%	50V(E, EA, AUS, JE)
C267	1-162-294-31	CERAMIC	0.001uF	10%	50V(E, EA, AUS, JE)
C268	1-124-465-00	ELECT	0.47uF	20%	50V(E, EA, AUS, JE)

< CONNECTOR >

CN251	1-695-366-21	PIN, CONNECTOR(PC BOARD) 5P
CN261	1-695-366-21	PIN, CONNECTOR(PC BOARD) 5P(E, EA, AUS, JE)

< IC >

IC250 8-759-634-51 IC M5218AP (E, EA, AUS, JE)

< JACK >

J251	1-750-032-11	JACK (DIA. 3.5) (HEADPHONES)
J261	1-750-032-11	JACK (DIA. 3.5) (MIX MIC) (E, EA, AUS, JE)

< RESISTOR >

R250	1-249-414-11	CARBON	560	5%	1/4W
R251	1-249-414-11	CARBON	560	5%	1/4W
R260	1-249-429-11	CARBON	10K	5%	1/4W(E, EA, AUS, JE)
R261	1-249-411-11	CARBON	330	5%	1/4W(E, EA, AUS, JE)
R262	1-249-417-11	CARBON	1K	5%	1/4W(E, EA, AUS, JE)
R263	1-247-885-00	CARBON	180K	5%	1/4W(E, EA, AUS, JE)
R264	1-249-441-11	CARBON	100K	5%	1/4W(E, EA, AUS, JE)

****

* 1-646-898-11 POWER SUPPLY BOARD
****

* 1-533-293-11 FUSE HOLDER

< CAPACITOR >

C921	1-164-159-11	CERAMIC	0.1uF	50V
C922	1-164-159-11	CERAMIC	0.1uF	50V

When indicating parts by reference number, please include the board name.

Global electronic heritage manuals

www.freeservicemanuals.info

POWER SUPPLY ECHO

Ref. No.	Part No.	Description				Remarks
C923	1-124-910-11	ELECT	47uF	20%	50V	
C924	1-124-910-11	ELECT	47uF	20%	50V	
C925	1-124-910-11	ELECT	47uF	20%	50V	
C926	1-124-910-11	ELECT	47uF	20%	50V	
		< CONNECTOR >				
* CN911	1-564-321-00	PIN, CONNECTOR 2P				
* CN912	1-750-533-11	CONNECTOR (B TO B) 6P				
* CN913	1-564-708-11	PIN, CONNECTOR (SMALL TYPE) 6P				
		< DIODE >				
D911	8-719-312-09	DIODE	RBA-402			
D912	8-719-934-13	DIODE	HZS24-1L			
D913	8-719-934-13	DIODE	HZS24-1L			
		< TRANSISTOR >				
Q911	8-729-018-59	TRANSISTOR	2SB1375-LC			
Q912	8-729-018-60	TRANSISTOR	2SD2012-LC			
		< RESISTOR >				
⚠R921	1-219-134-11	FUSIBLE	0.1	5%	1/4W	F
⚠R922	1-219-134-11	FUSIBLE	0.1	5%	1/4W	F
R923	1-249-421-11	CARBON	2.2K	5%	1/4W	
R924	1-249-421-11	CARBON	2.2K	5%	1/4W	
⚠R925	1-212-881-11	FUSIBLE	100	5%	1/4W	F
⚠R926	1-212-881-11	FUSIBLE	100	5%	1/4W	F
		< SWITCH >				
⚠S901	1-572-675-11	SWITCH, POWER VOLTAGE CHANGE (VOLTAGE SELECTOR) (E, EA, JE)				
**********						
*	A-4356-880-A	ECHO BOARD, COMPLETE (E, EA, AUS, JE)				
		**********				
		< CAPACITOR >				
C610	1-126-101-11	ELECT	100uF	20%	16V(E, EA, AUS, JE)	
C611	1-164-159-11	CERAMIC	0.1uF		50V(E, EA, AUS, JE)	
C612	1-162-291-31	CERAMIC	560PF	10%	50V(E, EA, AUS, JE)	
C613	1-124-903-11	ELECT	1uF	20%	50V(E, EA, AUS, JE)	
C614	1-102-126-00	CERAMIC	0.0056uF	10%	50V(E, EA, AUS, JE)	
C615	1-124-903-11	ELECT	1uF	20%	50V(E, EA, AUS, JE)	
C616	1-161-379-00	CERAMIC	0.01uF	20%	25V(E, EA, AUS, JE)	
C617	1-164-159-11	CERAMIC	0.1uF		50V(E, EA, AUS, JE)	
C618	1-124-910-11	ELECT	47uF	20%	50V(E, EA, AUS, JE)	
C619	1-164-159-11	CERAMIC	0.1uF		50V(E, EA, AUS, JE)	
C620	1-164-159-11	CERAMIC	0.1uF		50V(E, EA, AUS, JE)	
C621	1-164-159-11	CERAMIC	0.1uF		50V(E, EA, AUS, JE)	
C622	1-161-374-11	CERAMIC	0.0015uF	20%	50V(E, EA, AUS, JE)	
C623	1-124-903-11	ELECT	1uF	20%	50V(E, EA, AUS, JE)	
C624	1-136-165-00	FILM	0.1uF	5%	50V(E, EA, AUS, JE)	
C625	1-164-159-11	CERAMIC	0.1uF		50V(E, EA, AUS, JE)	
C629	1-124-907-11	ELECT	10uF	20%	50V(E, EA, AUS, JE)	
C630	1-162-282-31	CERAMIC	100PF	10%	50V(E, EA, AUS, JE)	
C631	1-161-374-11	CERAMIC	0.0015uF	20%	50V(E, EA, AUS, JE)	
C632	1-161-379-00	CERAMIC	0.01uF	20%	25V(E, EA, AUS, JE)	
C633	1-161-379-00	CERAMIC	0.01uF	20%	25V(E, EA, AUS, JE)	
C634	1-124-907-11	ELECT	10uF	20%	50V(E, EA, AUS, JE)	
		< CONNECTOR >				
CN611	1-695-366-21	PIN, CONNECTOR(PC BOARD) 5P(E, EA, AUS, JE)				
CN612	1-695-366-21	PIN, CONNECTOR(PC BOARD) 5P(E, EA, AUS, JE)				
* CN613	1-565-041-11	PIN, CONNECTOR(PC BOARD) 5P(E, EA, AUS, JE)				
		< DIODE >				
D610	8-719-028-15	LED	LED-SX-TP (E, EA, AUS, JE)			
		< IC >				
IC602	8-759-634-51	IC	M5218AP (E, EA, AUS, JE)			
IC610	8-759-166-05	IC	M65831PK (E, EA, AUS, JE)			
		< COIL >				
L610	1-408-104-00	INDUCTOR	1mH (E, EA, AUS, JE)			
		< RESISTOR >				
R610	1-247-903-00	CARBON	1M	5%	1/4W(E, EA, AUS, JE)	
R611	1-249-429-11	CARBON	10K	5%	1/4W(E, EA, AUS, JE)	
R612	1-249-429-11	CARBON	10K	5%	1/4W(E, EA, AUS, JE)	
R613	1-249-431-11	CARBON	15K	5%	1/4W(E, EA, AUS, JE)	
R614	1-249-431-11	CARBON	15K	5%	1/4W(E, EA, AUS, JE)	
R615	1-249-431-11	CARBON	15K	5%	1/4W(E, EA, AUS, JE)	
R616	1-249-431-11	CARBON	15K	5%	1/4W(E, EA, AUS, JE)	
R617	1-249-429-11	CARBON	10K	5%	1/4W(E, EA, AUS, JE)	
R618	1-249-436-11	CARBON	39K	5%	1/4W(E, EA, AUS, JE)	
R619	1-249-431-11	CARBON	15K	5%	1/4W(E, EA, AUS, JE)	
R623	1-247-887-00	CARBON	220K	5%	1/4W(E, EA, AUS, JE)	
R624	1-247-887-00	CARBON	220K	5%	1/4W(E, EA, AUS, JE)	
R625	1-249-429-11	CARBON	10K	5%	1/4W(E, EA, AUS, JE)	
R626	1-249-429-11	CARBON	10K	5%	1/4W(E, EA, AUS, JE)	
R627	1-249-429-11	CARBON	10K	5%	1/4W(E, EA, AUS, JE)	
R628	1-249-431-11	CARBON	15K	5%	1/4W(E, EA, AUS, JE)	
R629	1-247-887-00	CARBON	220K	5%	1/4W(E, EA, AUS, JE)	
R630	1-247-887-00	CARBON	220K	5%	1/4W(E, EA, AUS, JE)	
R631	1-249-417-11	CARBON	1K	5%	1/4W(E, EA, AUS, JE)	
		< VIBRATOR >				
X610	1-577-358-21	VIBRATOR, CERAMIC (2MHz) (E, EA, AUS, JE)				
**********						

The components identified by mark ⚠ or dotted line with mark ⚠ are critical for safety.
Replace only with part number specified.

When indicating parts by reference number, please include the board name.

Global electronic heritage manuals

www.freeservicemanuals.info

Ref. No.	Part No.	Description	Remarks
		MISCELLANEOUS	
		**********	
10	1-501-594-21	ANTENNA (FM) (G, IT)	
56	1-696-922-11	WIRE (FLAT TYPE) (15 CORE)	
57	1-696-923-11	WIRE (FLAT TYPE) (5 CORE)	
60	1-690-102-11	WIRE (FLAT TYPE) (17 CORE)	
65	1-690-588-31	WIRE (FLAT TYPE) (9 CORE)	
68	1-696-921-11	WIRE (FLAT TYPE) (19 CORE)	
⚠71	1-574-902-11	CORD, POWER (E, JE)	
⚠71	1-590-042-11	CORD, POWER (WITH CORE) (G, IT)	
⚠71	1-590-083-11	CORD, POWER (AUS)	
⚠71	1-696-169-11	CORD, POWER (AEP, EE, EA)	
⚠71	1-696-570-21	CORD, POWER (UK)	
⚠72	1-569-007-11	ADAPTOR, CONVERSION 2P (E, JE)	
⚠72	1-569-008-11	ADAPTOR, CONVERSION 2P (EA)	
167	1-638-983-11	PC BOARD, MOTOR FLEXIBLE	
268	1-590-530-11	WIRE (FLAT TYPE) (12 CORE)	
⚠304	8-848-144-11	OPTICAL PICK-UP BLOCK KSS-240A	
305	1-575-001-11	WIRE (FLAT TYPE) (12 CORE)	
ANT1	1-501-321-51	ANTENNA, TELESCOPIC (H71)	
⚠F901	1-532-285-00	FUSE (T1.25A 250V)	
⚠F902	1-532-203-00	FUSE (T2A 250V) (E, EA, JE)	
HP101	A-2003-837-F	BASE ASSY, HEAD (DECK-A)	
HRPE101	A-2003-838-A	DECK ASSY, HEAD (DECK-B)	
M101A	X-3363-501-1	MOTOR ASSY (REEL) (DECK-A)	
M101B	X-3363-501-1	MOTOR ASSY (REEL) (DECK-B)	
M102A	X-3359-417-1	MOTOR ASSY (CAPSTAN) (DECK-A)	
M102B	X-3359-417-1	MOTOR ASSY (CAPSTAN) (DECK-B)	
M291	A-4608-362-A	MOTOR (L) ASSY (LOADING)	
M301	X-4917-523-3	MOTOR ASSY (SPINDLE)	
M302	X-4917-504-1	MOTOR ASSY (SLED)	
⚠T901	1-423-471-11	TRANSFORMER, POWER (AEP, EE, G, IT)	
⚠T901	1-423-472-11	TRANSFORMER, POWER (AUS, UK)	
⚠T901	1-423-473-11	TRANSFORMER, POWER (E, EA, JE)	

****

Ref. No.	Part No.	Description	Remarks
		ACCESSORIES & PACKING MATERIALS	
		**********	
	1-466-957-11	REMOTE COMMANDER (RM-S71)	
	4-941-762-11	COVER (MLY), BATTERY (for RM-S71)	
*	4-957-906-01	CUSHION (FRONT)	
*	4-957-907-01	CUSHION (REAR)	

****

HARDWARE LIST

#1	7-685-871-01	SCREW +BVTT 3X6 (S)
#2	7-685-649-79	SCREW +BVTP 3X14 TYPE2 N-S
#3	7-685-648-79	SCREW +BVTP 3X12 TYPE2 N-S
#5	7-621-255-15	SCREW +PTT 2X3 (S)
#6	7-621-770-67	SCREW +PTT 2.6X6 (S)
#7	7-627-556-08	SCREW +P 2.6X2.8
#8	7-621-775-00	SCREW +B 2.6X3
#9	7-685-234-19	SCREW +KTP 2.6X8 TYPE2NON-SLIT
#10	7-685-646-79	SCREW +BVTP 3X8 TYPE2 N-S
#11	7-624-105-04	STOP RING 2.3, TYPE -E
#12	7-621-775-10	SCREW +B 2.6X4
#14	7-682-549-04	SCREW +BVTT 3X10 (S)

The components identified by mark ⚠ or dotted line with mark ⚠ are critical for safety.
Replace only with part number specified.

When indicating parts by reference number, please include the board name.

9-957-654-11

Sony Corporation
Audio Group

English
93C0565-1
Printed in Japan
© 1993. 3

Global electronic heritage manuals
Published by Audio Corporate Planning Group

www.freeservicemanuals.info
3/1/2014

HCD-H71/H71M

SONY

SERVICE MANUAL

AEP Model
E Model
Australian Model
Tourist Model
HCD-H71

AEP Model
UK Model
HCD-H71M

SUPPLEMENT-1

File this supplement with the service manual.

Subject:
1. DISASSEMBLY
2. BLOCK DIAGRAMS
3. MECHANICAL ADJUSTMENTS
4. ELECTRICAL ADJUSTMENTS

TABLE OF CONTENTS

Section	*Title*	*Page*
1.	**DISASSEMBLY**	
1-1.	Case Removal	2
1-2.	Power Block Removal	3
1-3.	Main Board Removal	3
1-4.	CD Mechanism Block Removal	4
1-5.	TC Mechanism Block Removal	4
2.	**BLOCK DIAGRAMS**	
2-1.	CD Section Block Diagram	5
2-2.	TC Section Block Diagram	7
2-3.	Main Section Block Diagram	10
3.	**MECHANICAL ADJUSTMENTS**	15
4.	**ELECTRICAL ADJUSTMENTS**	
	Deck Section	15
	Tuner Section	18
	CD Section	20

Global electronic heritage manuals

www.freeservicemanuals.info

SECTION 1
DISASSEMBLY

Note: Follow the disassembly procedure in the numerical order given.

1-1. CASE REMOVAL (HCT-H71M model)

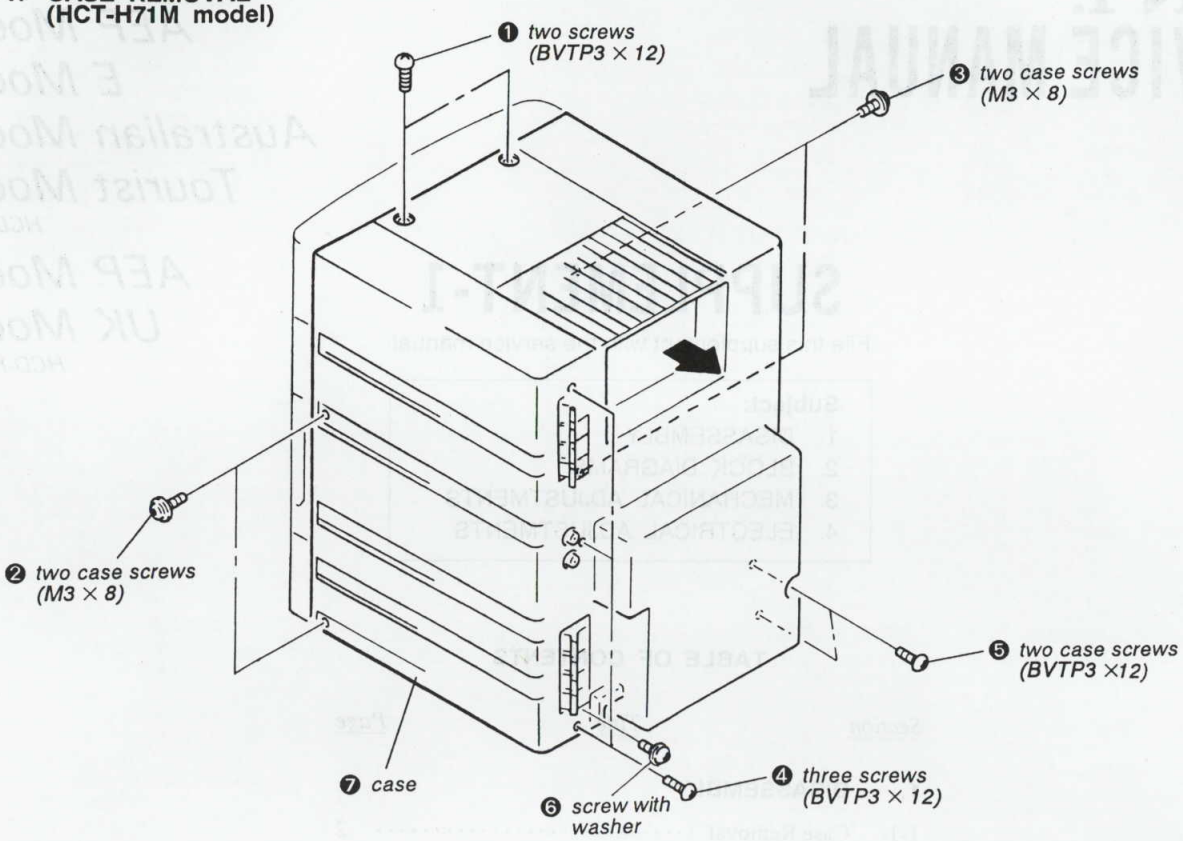

(HCT-H71 model)

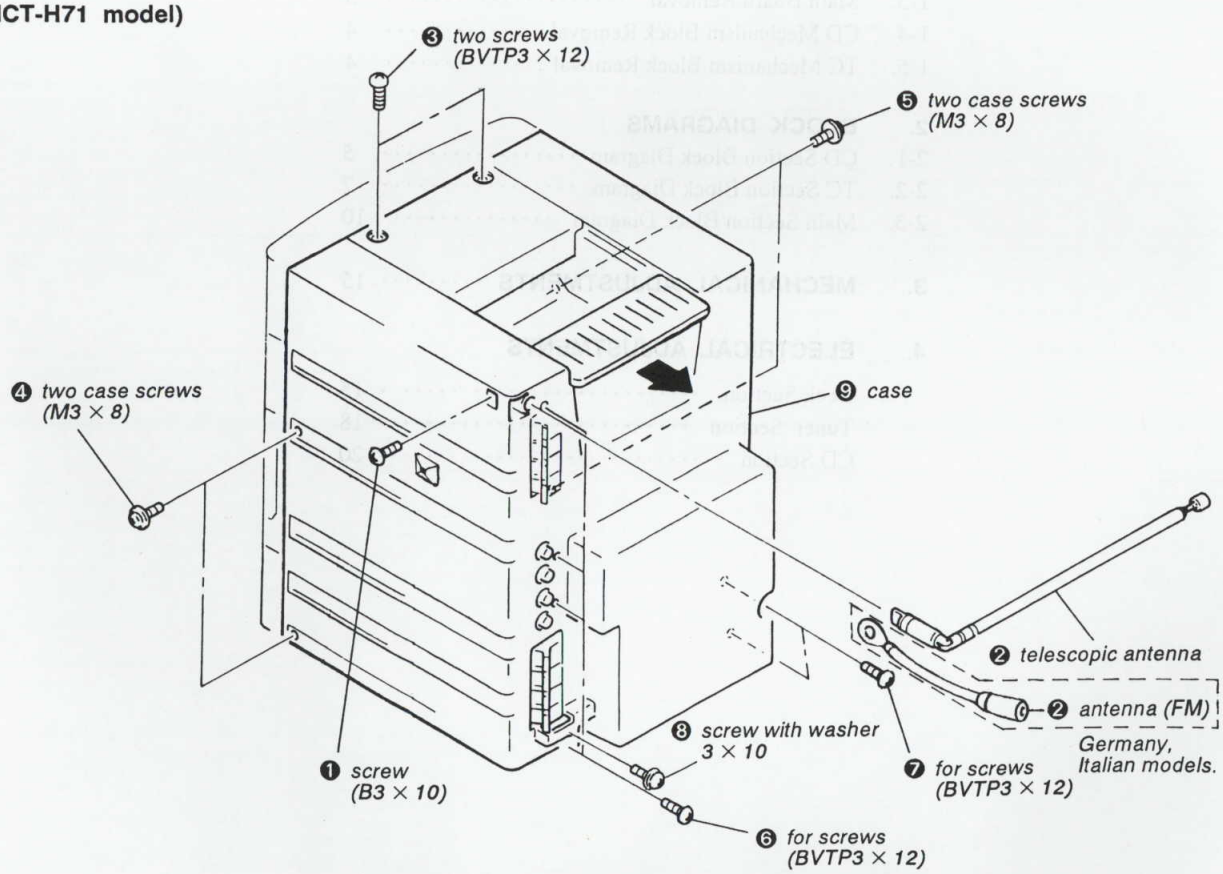

Global electronic heritage manuals

www.freeservicemanuals.info

1-2. POWER BLOCK REMOVAL

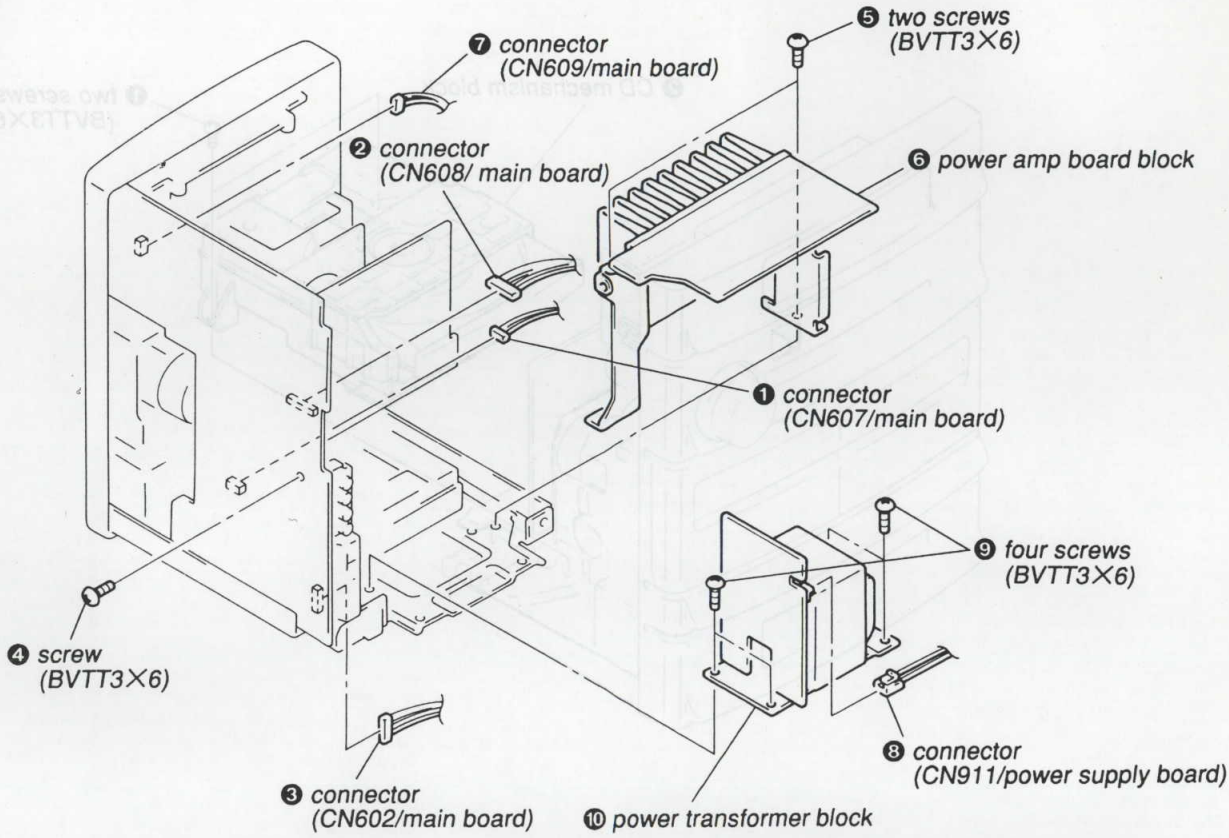

1-3. MAIN BOARD REMOVAL

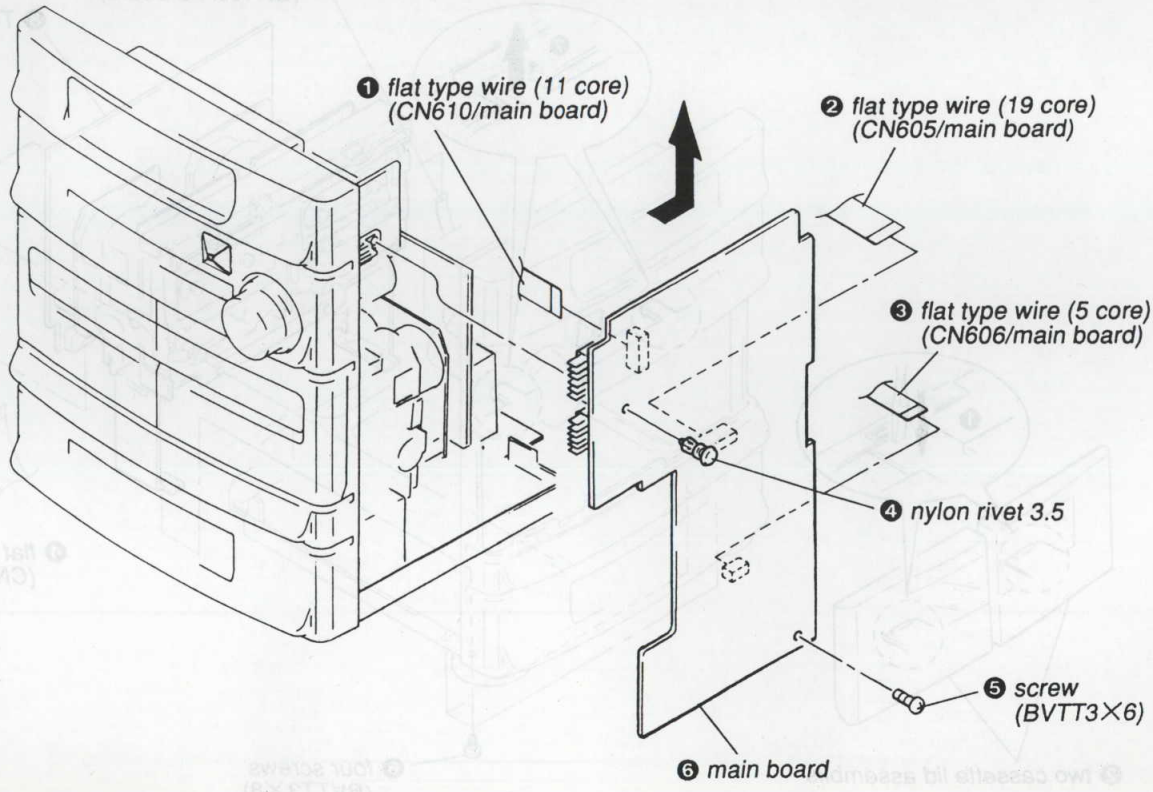

Global electronic heritage manuals

www.freeservicemanuals.info

1-4. CD MECHANISM BLOCK REMOVAL

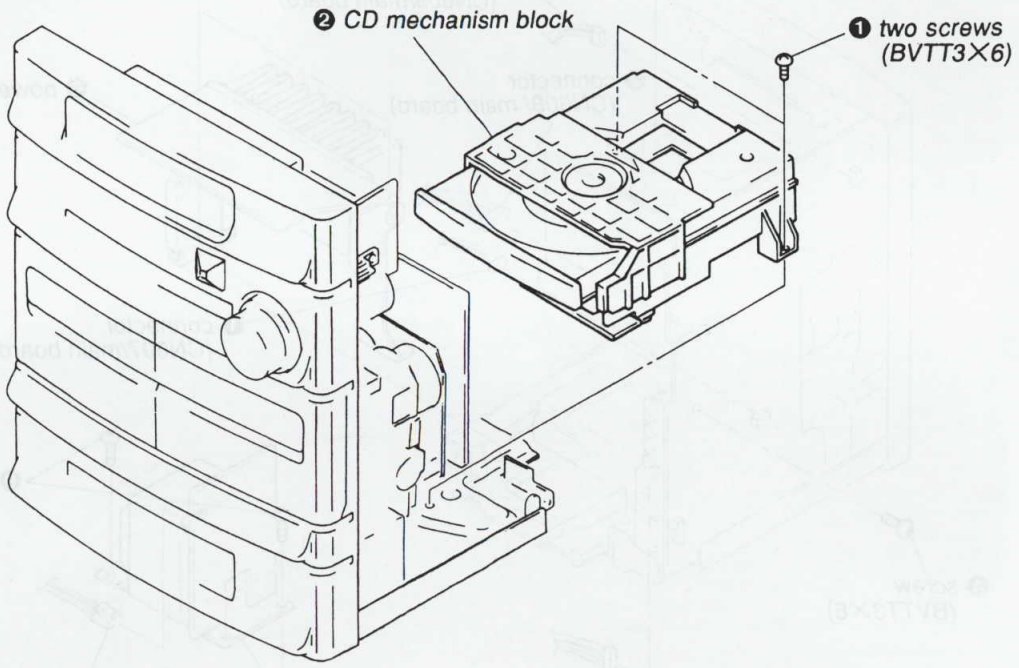

1-5. TC MECHANISM BLOCK REMOVAL

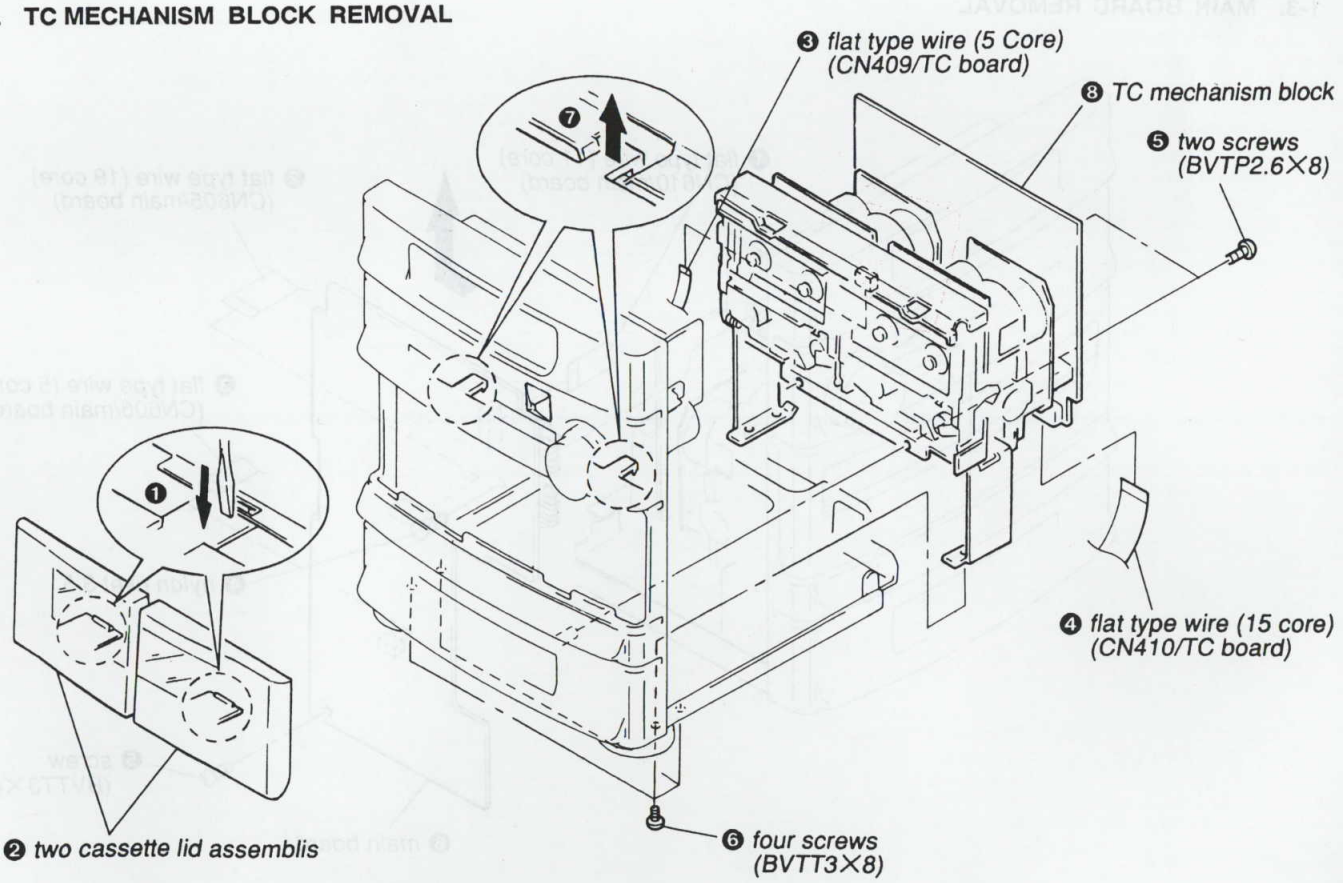

Global electronic heritage manuals

www.freeservicemanuals.info

SECTION 2
BLOCK DIAGRAMS

2-1. CD SECTION BLOCK DIAGRAM

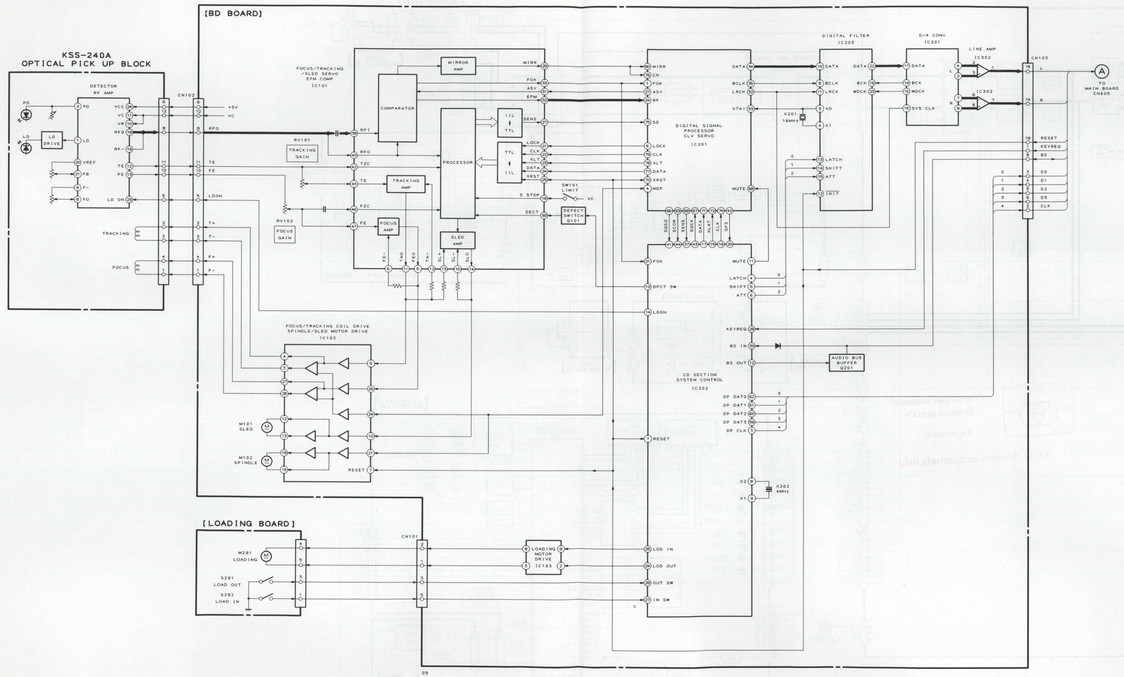

2-2. TC SECTION BLOCK DIAGRAM

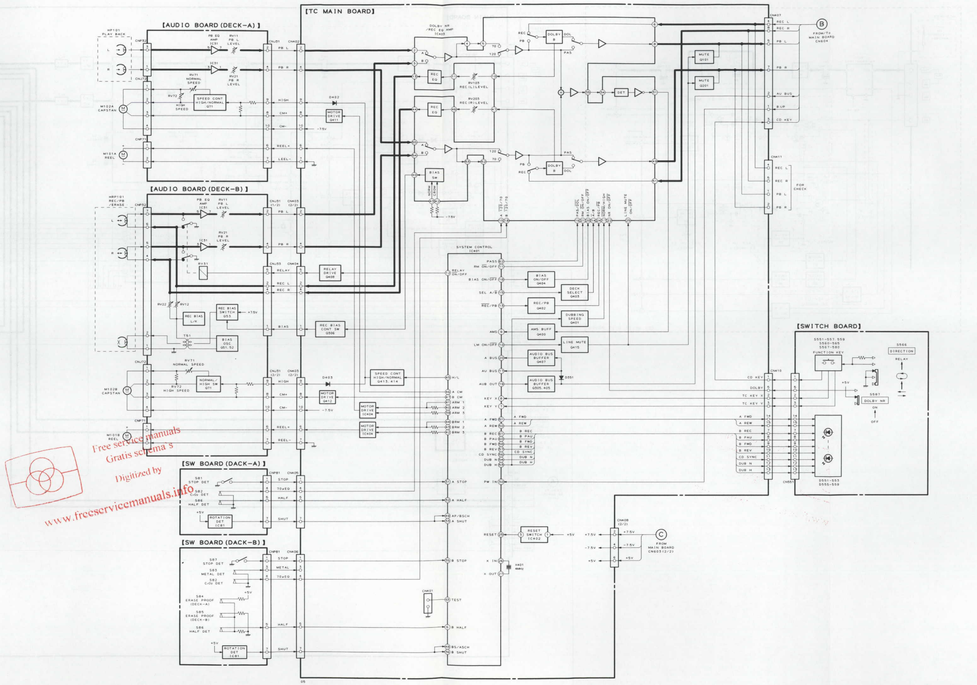

Free service manuals
Gratis service manuals
Digitized by
www.freeservicemanuals.info

www.freeservicemanuals.info

2-3. MAIN SECTION BLOCK DIAGRAM

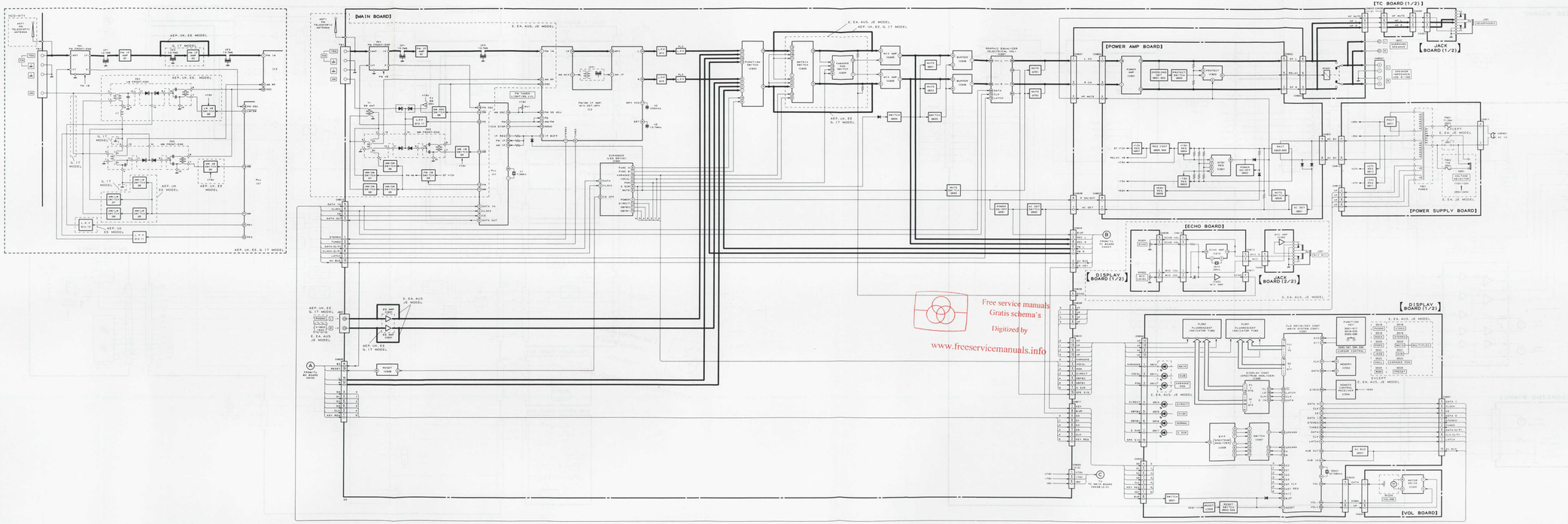

Free service manuals
Gratis schema's
Digitized by
www.freeservicemanuals.info

Global electronic heritage manuals

www.freeservicemanuals.info 3/1/2014

SECTION 3
MECHANICAL ADJUSTMENTS

PRECAUTION

1. Clean the following parts with a denatured alcohol-moistened swab :
   record/playback head — pinch roller
   erase head — rubber belt
   capstan — idler
2. Demagnetize the record/playback head with a head demagnetizer.
3. Do not use a magnetized screwdriver for the adjustment.
4. After the adjustments, apply suitable locking compound to the parts adjusted.
5. The adjustment should be performed with the rated power supply voltage unless otherwise noted.

• Torque Measurement

Torque	Torque meter	Meter reading
Forward	CQ-102C	35 to 60g • cm (0.49 to 0.83oz • inch)
Forward back tension	CQ-102C	2 to 6g • cm (0.028 to 0.08oz • inch)
Reverse	CQ-102RC	35 to 60g • cm (0.49 to 0.83oz • inch)
Reverse back tension	CQ-102RB	2 to 6g • cm (0.028 to 0.08oz • inch)
FF/REW	CQ-201B	70 to 110g • cm (0.98 to 1.52oz • inch)

SECTION 4
ELECTRICAL ADJUSTMENTS

DECK SECTION

1. The adjustment should be performed in the publication. (Be sure to make playback adjustment at first.)
2. The adjustment and measurement should be performed for both L-CH and R-CH.
   • Switch position
   DOLBY NR switch : OFF
3. Perior to electrical adjustments, short the connector CN401 (test mode).

• Test Tape

Tape	Contents	Use
P-4-A100	10kH, −10dB	Head Azimuth Adjustment
P-4-L300	315Hz, 0dB	Level Adjustment
WS-48B	3kHz, 0dB	Tape Speed Adjustment

Record/Playback Head Azimuth Adjustment

DECK A **DECK B**

Procedure :

1. Forward Playback Mode
   Reverse Playback Mode

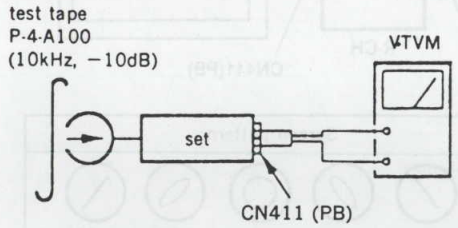

Free service manuals
Gratis schema's
Digitized by
www.freeservicemanuals.info

Global electronic heritage manuals

www.freeservicemanuals.info

2. Turn the adjustment screw for the maximum output levels. If these levels do not match, turn the adjustment screw until both of output levels match together within 1dB.

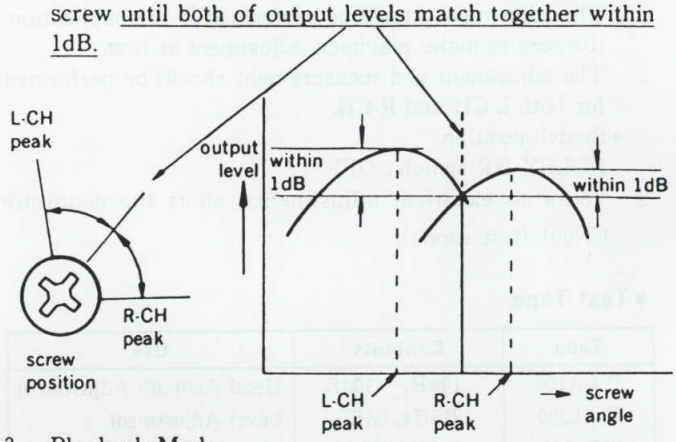

3. Playback Mode

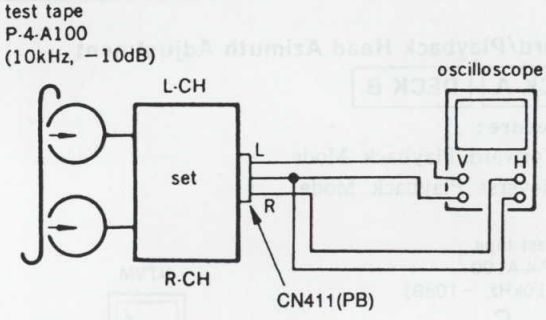

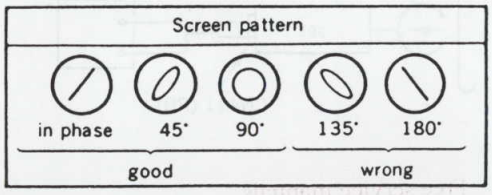

4. Change the review playback mode and repeat the steps 1 to 3.
5. After the adjustment, lock the adjustment screw with suitable locking compound.

Adjustment Location :

—record/playback head (deck A and B)

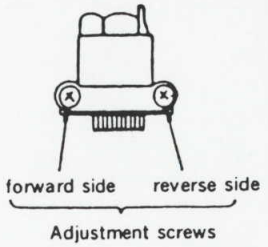

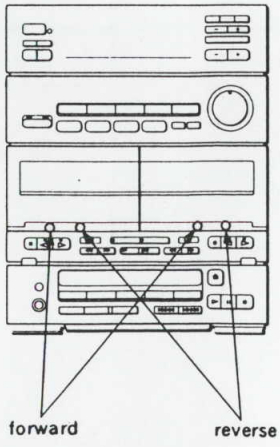

Tape Speed Adjustment DECK A DECK B

Procedure :

- Perform high speed adjustment before normal speed adjustment.

Mode : playback

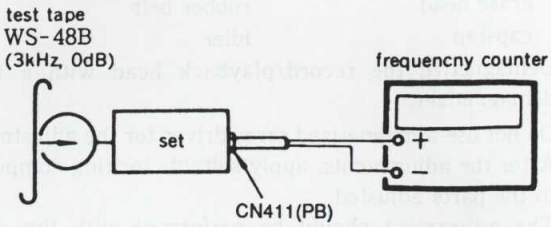

Speed	Deck	Adjustment	Frequency counter
※ High	A	RV72	5,970 to 6.030Hz
	B	RV72	
Normal	A	RV71	2,985 to 3,015Hz
	B	RV71	

※ Continue to press HIGH SPEED DUBBING switch (S557) in playback mode : High speed playback.

Frequency difference between the begining and the end of the tape should be within ±3%.

Frequency difference between deck A and deck B the biginning of the tape should be within 1.5%.

Adjustment Location: MD (AX) and MD (BX) boards.

Playback Level Adjustment DECK A DECK B

Procedure :

Mode : playback

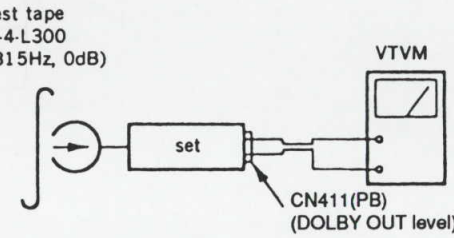

Deck A is RV11 (L-CH) and RV21 (R-CH), deck B is RV11 (L-CH) and RV21 (R-CH) so that adjustment within adjustment level as follows.

Adjusment Level :

LINE OUT level : −12.7 ± 1.0dB (0.16 to 0.20V)

Level Difference between Channels : within 0.5dB

Confirm the DOLBY OUT level does not change in playback mode while changing the mode from playback to stop several times.

Adjustment Location : MD (AX) and MD (BX) boards

Global electronic heritage manuals

www.freeservicemanuals.info

Record Bias Adjustment DECK B

Procedure :

1. record mode

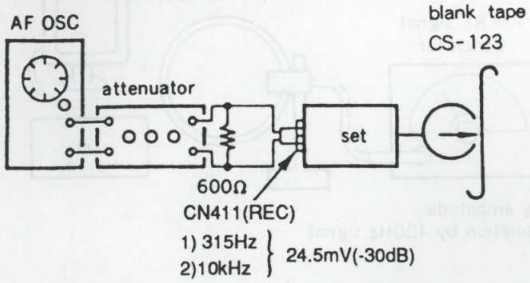

2. playback mode

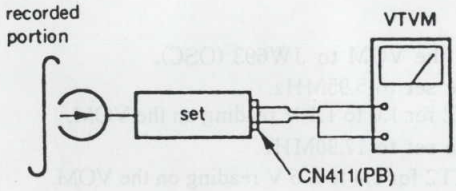

Confirm playback the signal recorded in step 1 become adjustment level as follows.
If these levels do not adjustment level, adjusment the RV12 (L-CH) and RV22 (R-CH) to repeat step 1 and 2.

Adjusment level : Playback output of 315Hz to playback output of 10kHz : −0.5dB to 0.5dB.

Adjustment Location : MD (BX) board

Record Level Adjustment DECK B

Procedure :

1. record mode

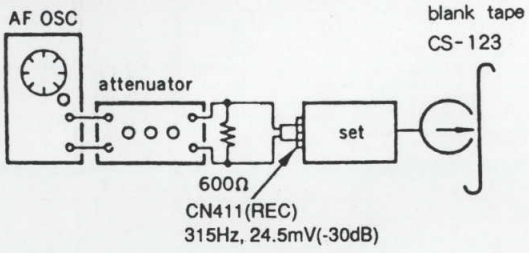

2. playback mode

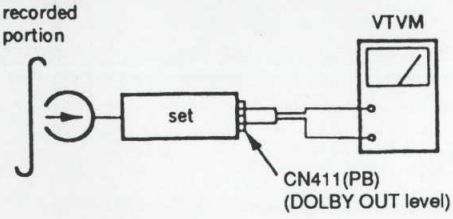

Confirm playback the signal recorded in step become adjustment level as follows.
If these levels do not adjustment level, adjusment the RV103 (L-CH) and RV203 (R-CH) to repeat step 1 and 2.

Adjusment Level :
DOLBY OUT level : −39.0dB±0.5dB (8.2 to 9.2mV)

Adjustment Location : TC board

Adjustment Location :

Mechanism deck − rear side −

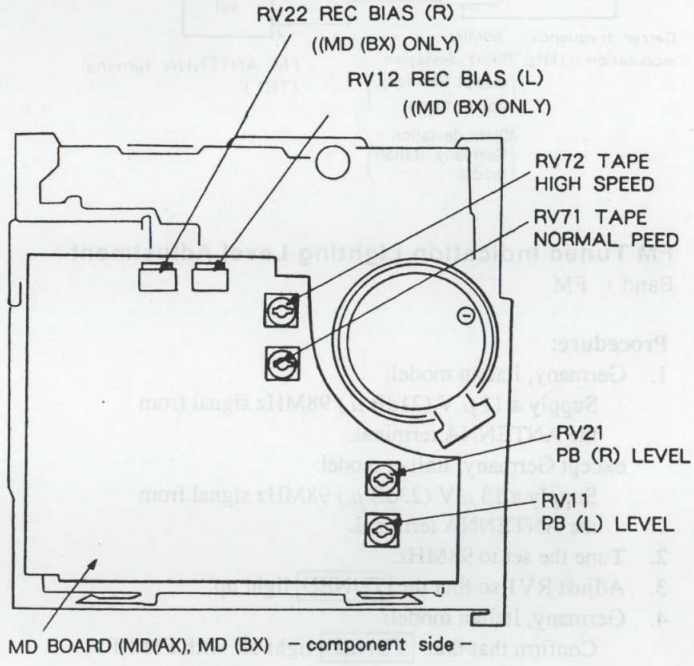

TC board − component side −

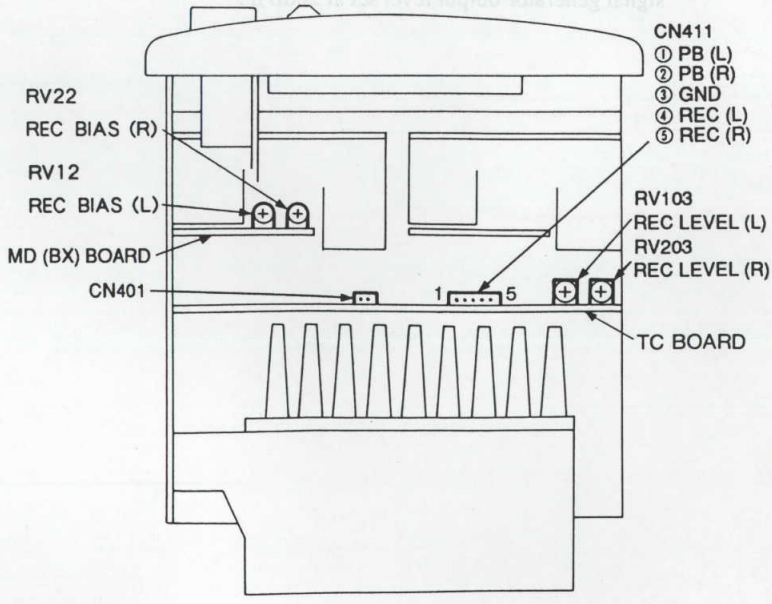

Global electronic heritage manuals

www.freeservicemanuals.info

TUNER SECTION

Note : As a front-end (FE1) is difficult to repair if faulty, replace it with new one.

FM SECTION ADJUSTMENTS

Setting :

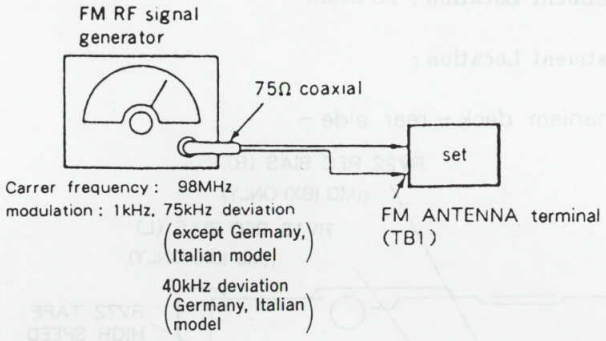

FM Tuned Indication Lighting Level Adjustment

Band : FM

Procedure:

1. Germany, Italian model:
   Supply a 11 μ V (21dB μ) 98MHz signal from the ANTENNA terminal.
   except Germany, Italian model:
   Supply a 13 μ V (23dB μ) 98MHz signal from the ANTENNA terminal.
2. Tune the set to 98MHz.
3. Adjust RV1 so thta the TUNED light up.
4. Germany, Italian model:
   Confirm that that TUNED light off with FM RF signal generator output level set at 18dB μ .
   except Germany, Italian model:
   Confirm that the TUNED light off with FM RF signal generator output level set at 20dB μ .

AM SECTION ADJUSTMENTS

Setting :

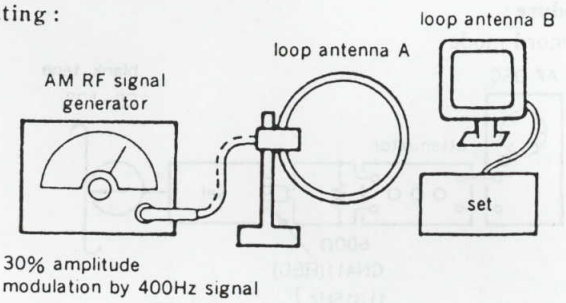

SW OSC Voltage Adjustment

Band : SW

Procedure :

1. Connect the VOM to JW693 (OSC).
2. Tune the set to 5.95MHz.
3. Adjust T2 for 1.0 to 1.1 V reading on the VOM.
4. Tune the set to 17.90MHz.
5. Adjust CT2 for 8.4 to 8.6 V reading on the VOM.

SW Tracking Adjustment

Band : SW

Procedure :

1. Connect the VOM to speaker terminal.
2. Adjust for a maximam reading on VOM(CN601).

Signal generator and Set frequency	Adjustment part
7.0MHz	T1
17.0MHz	CT1

Global electronic heritage manuals

www.freeservicemanuals.info 3/1/2014

Adjustment Location : main board —component side—

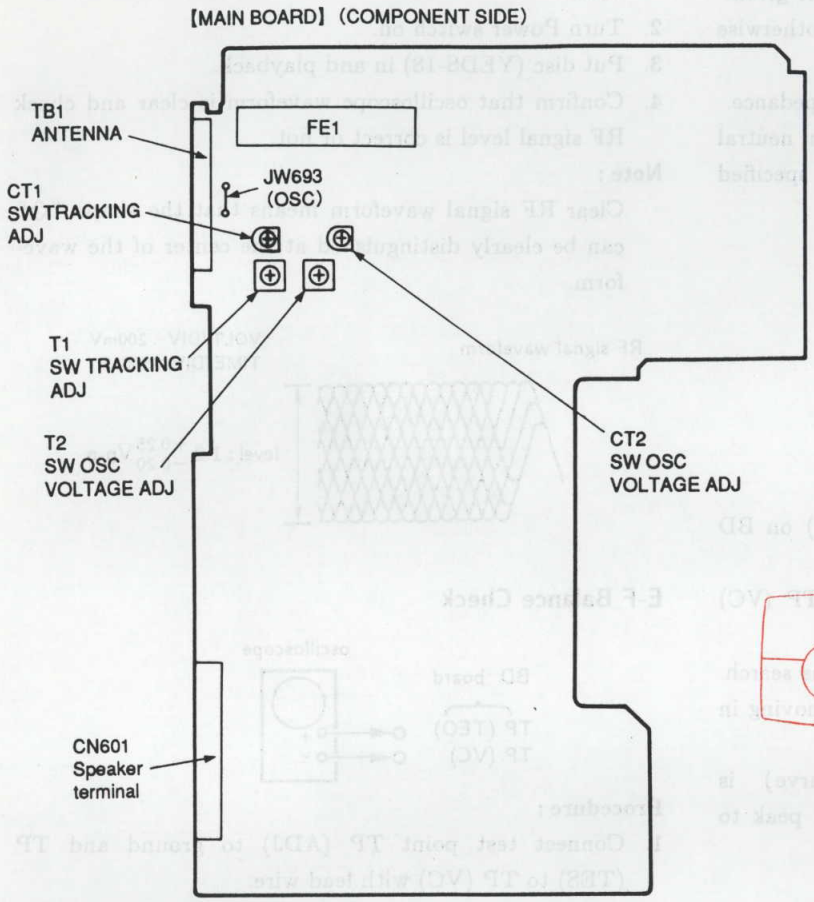

Free service manuals
Gratis schema's
Digitized by
www.freeservicemanuals.info

Global electronic heritage manuals

www.freeservicemanuals.info

CD SECTION

Note :

1. CD Block basically constructed to operate without adjustment. Therefore, check each item in order given.
2. Use YEDS-18 disc (3-702-101-01) unless otherwise indicated.
3. Use the oscilloscope with more than 10MΩ impedance.
4. Clean an object lens by an applicator with neutral detergent when the signal level is low than specified value with the following checks.

S-Curve Check

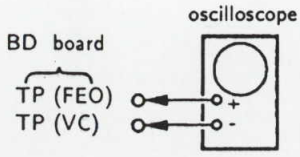

Procedure :

1. Connect oscilloscope to test point TP (FEO) on BD board.
2. Connect between test point TP (FES) and TP (VC) by lead wire.
3. Turned Power switch on and actuate the focus search. (actuate the focus search when disc table is moving in and out.)
4. Check the oscilloscope waveform (S-curve) is symmetrical between A and B. And confirm peak to peak level within 3±1Vp-p.

S-curve waveform

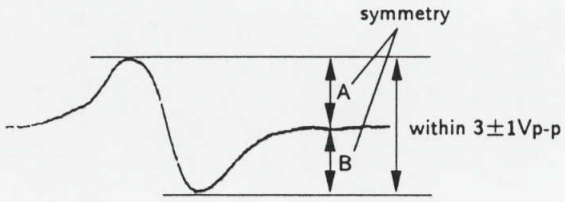

5. After check, remove the lead wire connected in step 2.

Note : • Try to measure several times to make sure that the ratio of A : B or B : A is more than 10 : 7.
• Take sweep time as long as possible and light up the brightness to obtain best waveform.

RF Level Check

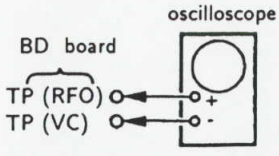

Procedure :

1. Connect oscilloscope to test point TP (RFO) on BD board.
2. Turn Power switch on.
3. Put disc (YEDS-18) in and playback.
4. Confirm that oscilloscope waveform is clear and check RF signal level is correct or not.

Note :

Clear RF signal waveform means that the shape "◇" can be clearly distinguished at the center of the waveform.

RF signal waveform

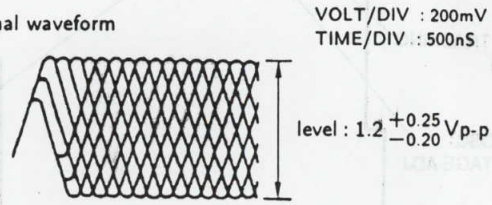

E-F Balance Check

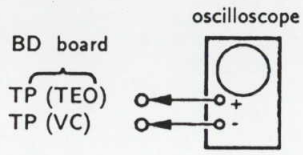

Procedure :

1. Connect test point TP (ADJ) to ground and TP (TES) to TP (VC) with lead wire.
2. Connect oscilloscope to test point TP (TEO) on BD board.
3. Turn Power switch on.
4. Put disc (YEDS-18) in and playback.
5. Confirm that the osilloscope waveform is symmetrical on the top and bottom in relation to 0V, and check this level.

Traverse waveform

6. Remove the lead wire connected in step 1.

Global electronic heritage manuals

www.freeservicemanuals.info

RF PLL Free-run Frequency Check

Procedure :

1. Connect frequency counter to test point (PCK) with lead wire.

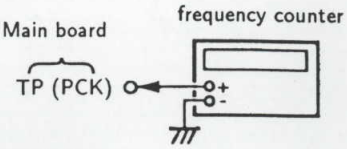

2. Turn Power switch on.
3. Confirm that reading on frequency counter is 4.3218 MHz.

Focus/Tracking Gain

This gain has a margin, so even if it is slightly off. There is no problem.
Therefore, do not perform, this adjustment.
Please note that it should be fixed to mechanical center position when you moved and do not know original position.

Adjustment Location :

【BD BOARD】**(SIDE B)**

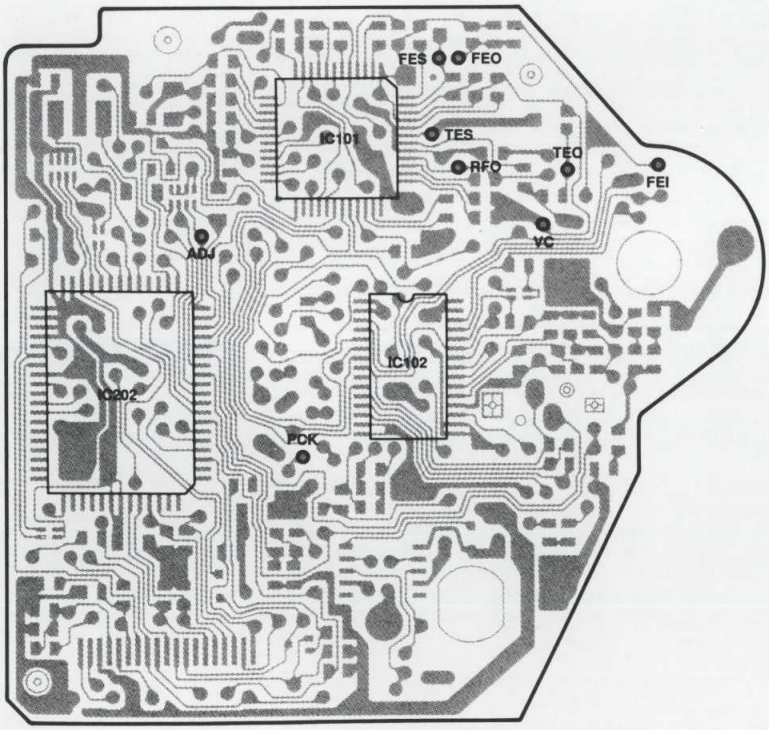

Global electronic heritage manuals

www.freeservicemanuals.info

9-957-654-81

Sony Corporation
Audio Group

Global electronic heritage manuals

English
93E0565-1
Printed in Japan
© 1993. 5
Published by Audio Sector Quality Assurance Dept.

www.freeservicemanuals.info

HCD-H71/H71M

SONY
SERVICE MANUAL

AEP Model
E Model
Australian Model
Tourist Model
HCD-H71
AEP Model
UK Model
HCD-H71M

SUPPLEMENT-2

File this Supplement with the Service Manual.

Subject :
Details of the model using TCM-190RB43A for the deck B with basic mechanism in its tape deck.

- The only difference between TCM-190RB22A and TCM190RB43A is that the MD board has been changed. All other mechanism parts, etc. are the same.
- Though the constants of some circuits have been changed with the use of TCM-190RB43A, the constants after the changes can be used with TCM-190RB22A.

[MD BOARD] (B DECK)

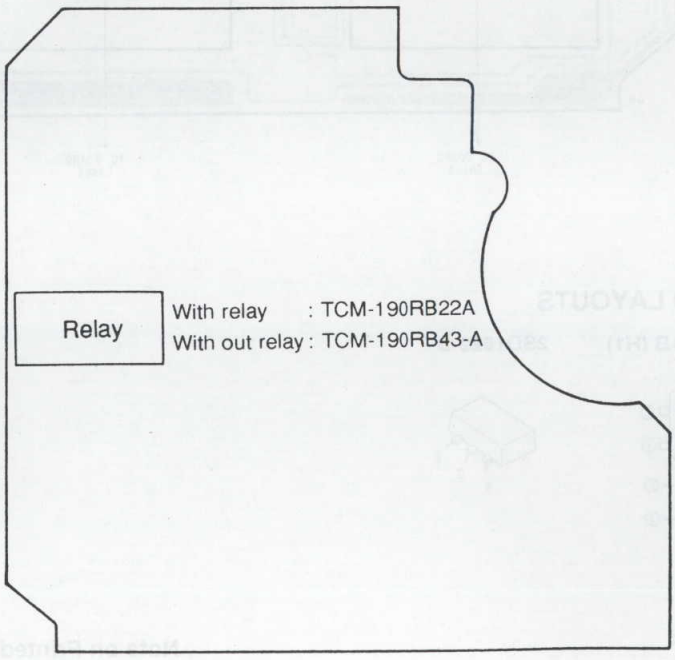

Global electronic heritage manuals

www.freeservicemanuals.info

DIAGRAMS

PRINTED WIRING BOARD
• MD BOARD (B DECK) SECTION

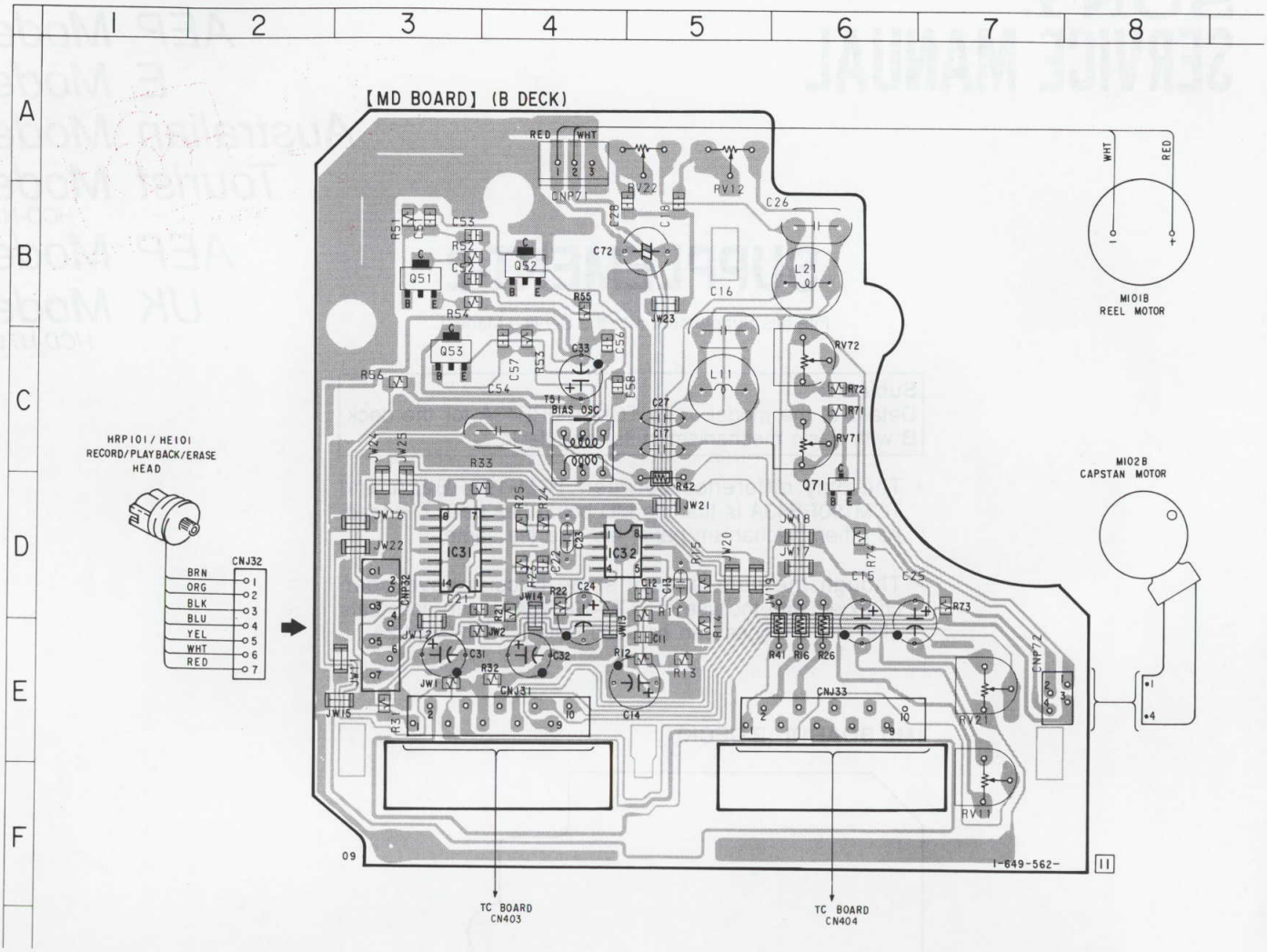

• SEMICONDUCTOR LERD LAYOUTS

μPC1330GR

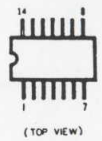

NJL5165K-B (H1)

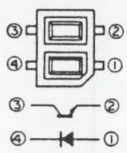

2SD1622-S

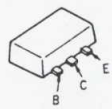

μPC4570G2

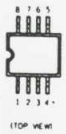

2SA1602
2SA1235-F

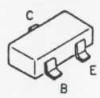

• Semiconductor Location

Ref.No.	Location
IC31	D-3
IC32	D-4
Q51	B-3
Q52	B-4
Q53	C-3
Q71	D-6

Note on Printed Wiring Board:

- ○—— : parts extracted from the components side.
- [ ] indicates side identified with part number.
- ▒▒▒ : Pattern from side which enables seeing.

Global electronic heritage manuals

www.freeservicemanuals.info

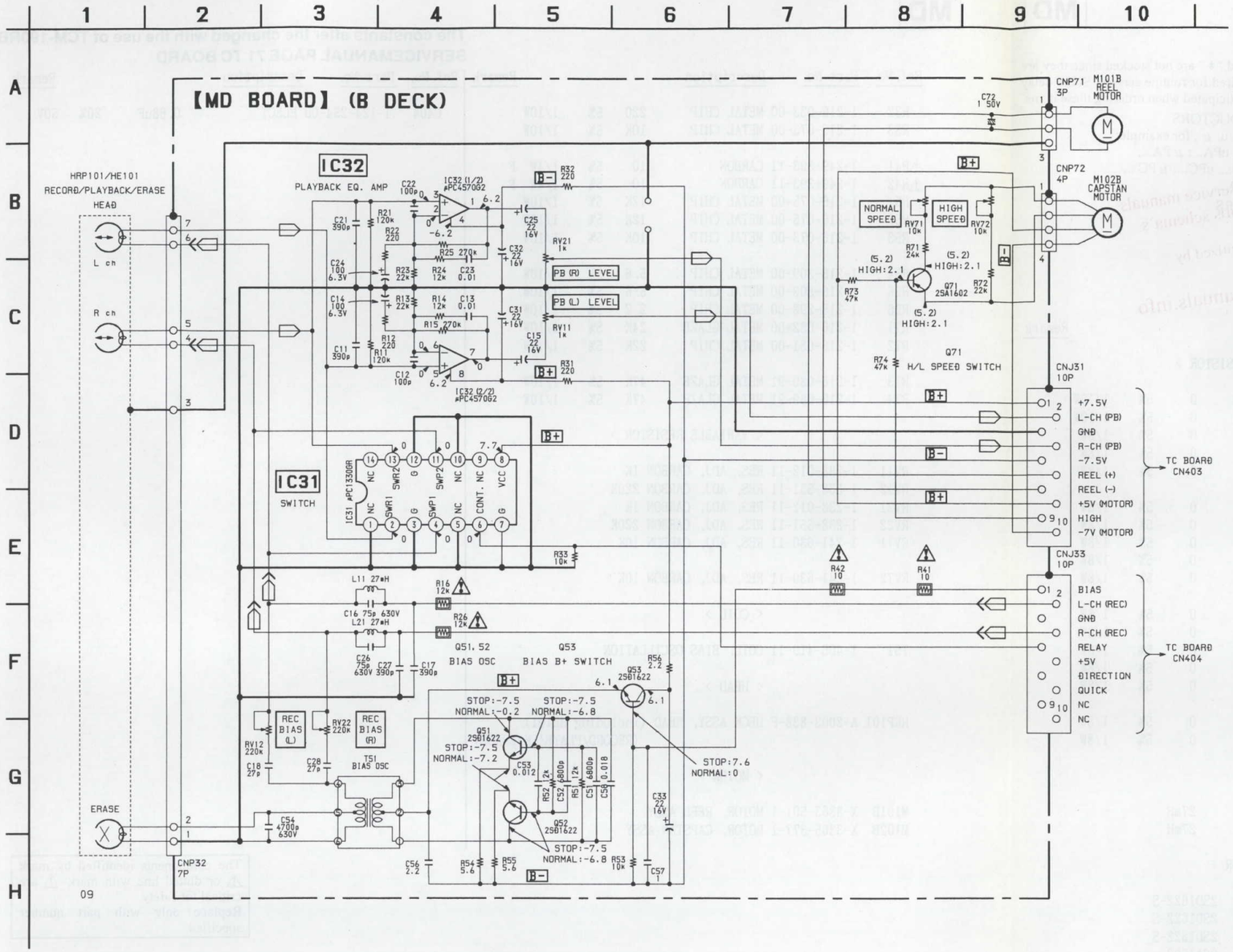

NOTE

- All capacitors are in μF unless otherwise noted. pF: μμF 50WV or less are not indicated except for electrolytics and tantalums.
- All resistors are in Ω and 1/4W or less unless otherwise specified.
- ▭ :nonflammable resistor.

Note:	Note:
The components identified by mark ⚠ or dotted line with mark ⚠ are critical for safety. Replace only with part number specified.	Les composants identifiés par une marque ⚠ sont critiques pour la sécurité. Ne les remplacer que par une pièce portant le numéro spécifié.

- B+ :B+ Line.
- B- :B- Line.
- ▭ :adjustment for repair.
- Voltages and waveforms are dc with respect to ground under no-signal conditions.
  no mark: PLAY
  ( ): REC
- Voltages are taken with a VOM (Input impedance 10MΩ). Voltage variations may be noted due to normal production tolerances.
- Signal path.
  ▷ :PB (DECK B)
  ▷» :REC (DECK B)

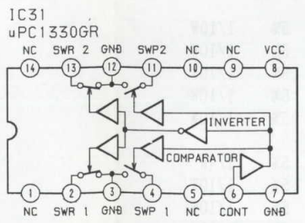

The constants after the changed with the use of TCM-190RB43A.
: SERVICEMANUAL PAGE 32 TC BOARD (F-9)

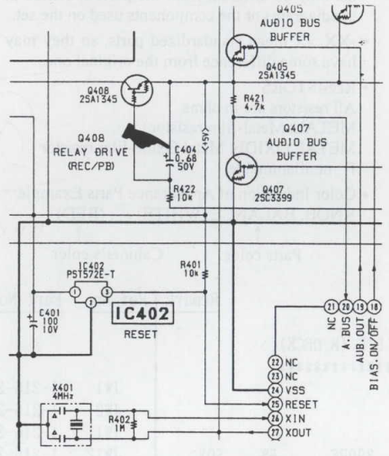

Ref No.	FORMER	NEW
C404	1μF/ 50V	0.68μF/ 50V (1-124-254-00)

Global electronic heritage manuals

www.freeservicemanuals.info

ELECTRICAL PARTS LIST

MD

NOTE:

The components identified by mark ⚠ or dotted line with mark ⚠ are critical for safety.
Replace only with part number specified.

When indicating parts by reference number, please include the board name.

- Due to standardization, replacements in the parts list may be different from the parts specified in the diagrams or the components used on the set.
- -XX, -X mean standardized parts, so they may have some difference from the original one.
- RESISTORS
  All resistors are in ohms
  METAL: Metal-film resistor
  METAL OXIDE: Metal Oxide-film resistor
  F : nonflammable
- Color Indication of Appearance Parts Example:
  KNOB, BALANCE (WHITE) . . . (RED)
  ↑ Parts color ↑ Cabinet's color
- Items marked "*" are not stocked since they are seldom required for routine service. Some delay should be anticipated when ordering these items.
- SEMICONDUCTORS
  In each case, u: μ , for example:
  uA...: μA..., uPA...: μPA...,
  uPB...: μPB..., uPC...: μPC...,
  uPD...: μPD...
- CAPACITORS
  uF : μF
- COILS
  uH : μH

Service manuals
Diagrams schema's
Digitized by
www.freeservicemanuals.info

Ref.No.	Part No.	Description			Remark
*	A-2007-102-A	MD BOARD, COMPLETE (B DECK)			
		**********			
		< CAPACITOR >			
C11	1-163-131-00	CERAMIC CHIP	390PF	5% 50V	
C12	1-163-117-00	CERAMIC CHIP	100PF	5% 50V	
C13	1-136-153-00	FILM	0.01uF	5% 50V	
C14	1-126-177-11	ELECT	100uF	20% 10V	
C15	1-124-234-00	ELECT	22uF	20% 16V	
C16	1-136-273-91	FILM	75PF	5% 630V	
C17	1-164-080-11	CERAMIC	390PF	10% 50V	
C18	1-163-103-00	CERAMIC CHIP	27PF	5% 50V	
C21	1-163-131-00	CERAMIC CHIP	390PF	5% 50V	
C22	1-163-117-00	CERAMIC CHIP	100PF	5% 50V	
C23	1-136-153-00	FILM	0.01uF	5% 50V	
C24	1-126-177-11	ELECT	100uF	20% 10V	
C25	1-124-234-00	ELECT	22uF	20% 16V	
C26	1-136-273-91	FILM	75PF	5% 630V	
C27	1-164-080-11	CERAMIC	390PF	10% 50V	
C28	1-163-103-00	CERAMIC CHIP	27PF	5% 50V	
C31	1-124-234-00	ELECT	22uF	20% 16V	
C32	1-124-234-00	ELECT	22uF	20% 16V	
C33	1-124-234-00	ELECT	22uF	20% 16V	
C51	1-163-019-00	CERAMIC CHIP	0.0068uF	10% 50V	
C52	1-163-019-00	CERAMIC CHIP	0.0068uF	10% 50V	
C53	1-163-022-00	CERAMIC CHIP	0.012uF	10% 50V	
C54	1-136-559-11	FILM	0.0047uF	5% 630V	
C56	1-164-505-11	CERAMIC CHIP	2.2uF	16V	
C57	1-164-346-11	CERAMIC CHIP	1uF	16V	
C58	1-163-024-00	CERAMIC CHIP	0.018uF	10% 50V	
C72	1-124-499-11	ELECT, NONPOLAR	1uF	20% 50V	
		< CONNECTOR >			
* CNJ31	1-580-782-11	CONNECTOR, BOARD TO BOARD 10P			
* CNJ33	1-580-782-11	CONNECTOR, BOARD TO BOARD 10P			
* CNJ72	1-580-411-11	SOCKET, CONNECTOR 4P			
* CNP32	1-580-781-11	PIN, CONNECTOR (PC BOARD) 7P			
* CNP71	1-564-719-11	PIN, CONNECTOR (SMALL TYPE) 3P			
		< IC >			
IC31	8-759-154-34	IC uPC1330GR			
IC32	8-759-106-02	IC uPC4570G2			
		< JUMPER RESISTOR >			
JW1	1-216-295-91	METAL GLAZE	0	5% 1/10W	
JW2	1-216-295-91	METAL GLAZE	0	5% 1/10W	
JW11	1-216-296-00	METAL CHIP	0	5% 1/8W	
JW12	1-216-296-00	METAL CHIP	0	5% 1/8W	
JW13	1-216-296-00	METAL CHIP	0	5% 1/8W	
JW14	1-216-296-00	METAL CHIP	0	5% 1/8W	
JW15	1-216-296-00	METAL CHIP	0	5% 1/8W	
JW16	1-216-296-00	METAL CHIP	0	5% 1/8W	
JW17	1-216-296-00	METAL CHIP	0	5% 1/8W	
JW18	1-216-296-00	METAL CHIP	0	5% 1/8W	
JW19	1-216-296-00	METAL CHIP	0	5% 1/8W	
JW20	1-216-296-00	METAL CHIP	0	5% 1/8W	
JW21	1-216-296-00	METAL CHIP	0	5% 1/8W	
JW22	1-216-296-00	METAL CHIP	0	5% 1/8W	
JW23	1-216-296-00	METAL CHIP	0	5% 1/8W	
JW24	1-216-296-00	METAL CHIP	0	5% 1/8W	
JW25	1-216-296-00	METAL CHIP	0	5% 1/8W	
		< COIL >			
L11	1-410-780-11	INDUCTOR	27mH		
L21	1-410-780-11	INDUCTOR	27mH		
		< TRANSISTOR >			
Q51	8-729-808-01	TRANSISTOR	2SD1622-S		
Q52	8-729-808-01	TRANSISTOR	2SD1622-S		
Q53	8-729-808-01	TRANSISTOR	2SD1622-S		
Q71	8-729-602-36	TRANSISTOR	2SA1602		
		< RESISTOR >			
R11	1-216-099-00	METAL CHIP	120K	5% 1/10W	
R12	1-216-033-00	METAL CHIP	220	5% 1/10W	
R13	1-216-081-00	METAL CHIP	22K	5% 1/10W	
R14	1-216-075-00	METAL CHIP	12K	5% 1/10W	
R15	1-216-107-00	METAL CHIP	270K	5% 1/10W	
⚠R16	1-249-430-11	CARBON	12K	5% 1/4W	
R21	1-216-099-00	METAL CHIP	120K	5% 1/10W	
R22	1-216-033-00	METAL CHIP	220	5% 1/10W	
R23	1-216-081-00	METAL CHIP	22K	5% 1/10W	
R24	1-216-075-00	METAL CHIP	12K	5% 1/10W	
R25	1-216-107-00	METAL CHIP	270K	5% 1/10W	
⚠R26	1-249-430-11	CARBON	12K	5% 1/4W	
R31	1-216-033-00	METAL CHIP	220	5% 1/10W	
R32	1-216-033-00	METAL CHIP	220	5% 1/10W	
R33	1-216-073-00	METAL CHIP	10K	5% 1/10W	
⚠R41	1-249-393-11	CARBON	10	5% 1/4W F	
⚠R42	1-249-393-11	CARBON	10	5% 1/4W F	
R51	1-216-075-00	METAL CHIP	12K	5% 1/10W	
R52	1-216-075-00	METAL CHIP	12K	5% 1/10W	
R53	1-216-073-00	METAL CHIP	10K	5% 1/10W	
R54	1-216-309-00	METAL CHIP	5.6	5% 1/10W	
R55	1-216-309-00	METAL CHIP	5.6	5% 1/10W	
R56	1-216-298-00	METAL CHIP	2.2	5% 1/10W	
R71	1-216-082-00	METAL GLAZE	24K	5% 1/10W	
R72	1-216-081-00	METAL CHIP	22K	5% 1/10W	
R73	1-216-089-91	METAL GLAZE	47K	5% 1/10W	
R74	1-216-089-91	METAL GLAZE	47K	5% 1/10W	
		< VARIABLE RESISTOR >			
RV11	1-238-012-11	RES, ADJ, CARBON	1K		
RV12	1-238-551-11	RES, ADJ, CARBON	220K		
RV21	1-238-012-11	RES, ADJ, CARBON	1K		
RV22	1-238-551-11	RES, ADJ, CARBON	220K		
RV71	1-241-630-11	RES, ADJ, CARBON	10K		
RV72	1-241-630-11	RES, ADJ, CARBON	10K		
		< COIL >			
T51	1-406-419-11	COIL, BIAS OSCILLATION			
		< HEAD >			
HRP101	A-2003-838-F	DECK ASSY, HEAD (including HE101) (RECORD/PLAYBACK/ERASE)			
		< MOTOR >			
M101B	X-3363-501-1	MOTOR, REEL ASSY			
M102B	X-3365-377-1	MOTOR, CAPSTAN ASSY			

The constants after the changed with the use of TCM-190RB43A
SERVICEMANUAL PAGE 71 TC BOARD

Ref.No.	Part No.	Description			Remark
C404	1-124-254-00	ELECT	0.68uF	20% 50V	

The components identified by mark ⚠ or dotted line with mark ⚠ are critical for safety.
Replace only with part number specified.

9-957-654-82

Global electronic heritage manuals

Sony Corporation
Audio Group

English
9310965-1
Printed in Japan
© 1993.9
Published by Audio Sector Quality Assurance Dept.

www.freeservicemanuals.info
3/1/2014

HCD-H71/H71M

SONY

SERVICE MANUAL

AEP Model
E Model
Australian Model
Tourist Model
HCD-H71
AEP Model
UK Model
HCD-H71M

SUPPLEMENT-3

File this Supplement with the Service Manual.

Subject: Parts difference notice for the optical device

Refer the following chart when you place an order the parts.

	For optical device KSS-240A		For optical device KSS-390A	
Ref.No.	Part No.	Description	Part No.	Description
⚠304	8-848-144-11	DEVICE, OPTICAL KSS-240A	8-848-281-11	DEVICE, OPTICAL KSS-390A
305	1-575-001-11	WIRE, FLAT TYPE (12 CORE)	1-647-341-11	PC BOARD, FLEXIBLE
* 307	A-4649-541-A	BD BOARD, COMPLETE	A-4649-541-B	BD BOARD, COMPLETE
*	A-4649-541-A	BD BOARD, COMPLETE **********	A-4649-541-B	BD BOARD, COMPLETE **********
C103	1-135-155-21	TANTALUM CHIP 4.7uF 10% 16V	1-135-157-21	TANTALUM CHIP 10uF 10% 6.3V
C112	1-164-232-11	CERAMIC CHIP 0.01uF 50V	1-164-004-11	CERAMIC CHIP 0.1uF 10% 25V

NOTE:
- Due to standardization, replacements in the parts list may be different from the parts specified in the diagrams or the components used on the set.
- Items marked "*" are not stocked since they are seldom required for routine service. Some delay should be anticipated when ordering these items.
- CAPACITORS
  uF : µF

The components identified by mark ⚠ or dotted line with mark ⚠ are critical for safety.
Replace only with part number specified.

Global electronic heritage manuals

www.freeservicemanuals.info

SCHEMATIC DIAGRAM

☛ : Difference portion

[BD BOARD]

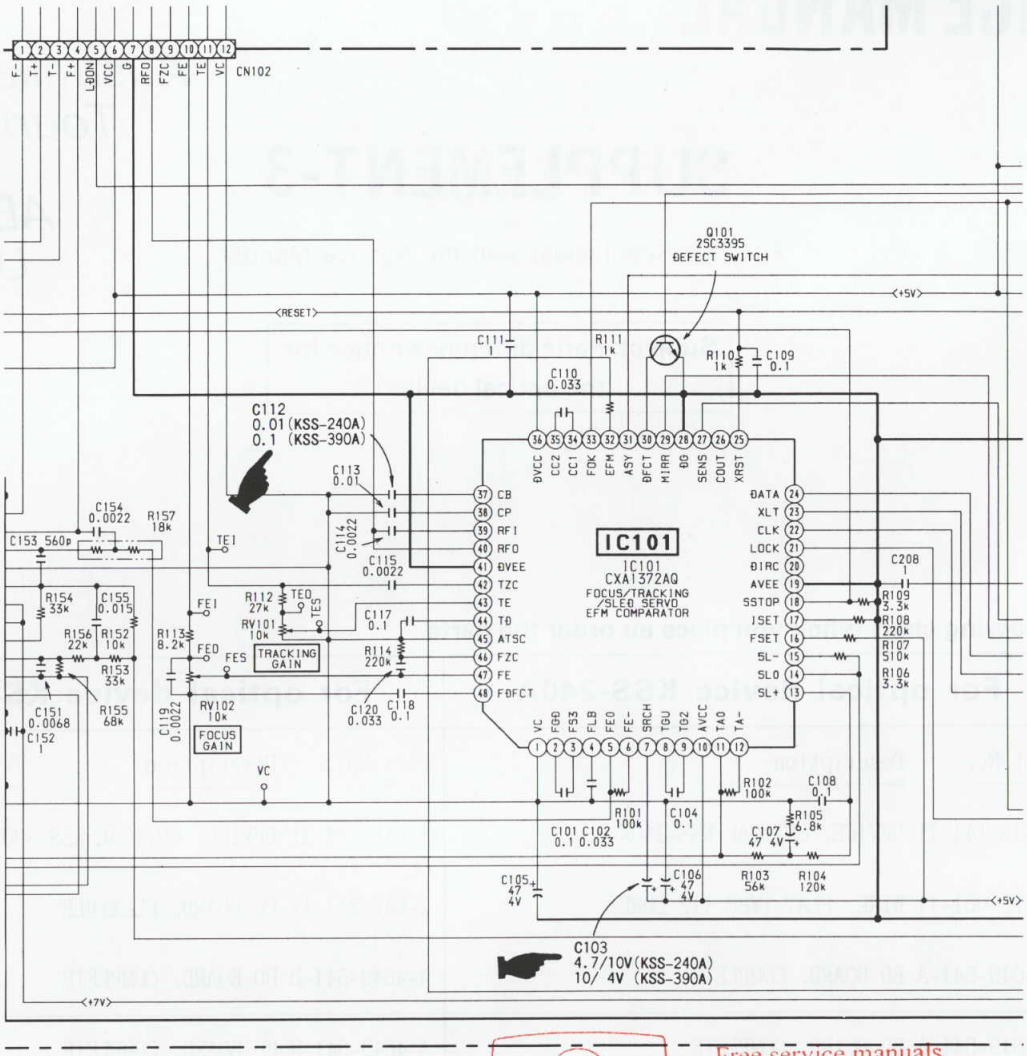

Free service manuals
Gratis schema's
Digitized by
www.freeservicemanuals.info

Free service manuals
Gratis schema's
Digitized by
www.freeservicemanuals.info

Sony Corporation
Consumer A&V Products Company
Home A&V Products Div.

English
9411871-1
Printed in Japan
©1994.9

9-957-654-83

Published by Home A&V Products Div. Quality Engineering Dept.

Global electronic heritage manuals